RPL-5501 ADDENDUM

RPL-5501

OWNER'S MANUAL ADDENDUM

READ THIS FIRST!

THE FOLLOWING PAGES WILL SUPERCEDE THE EXISTING PAGES IN THE RPL-5501 MANUAL CATALOG NUMBER 0208-004.

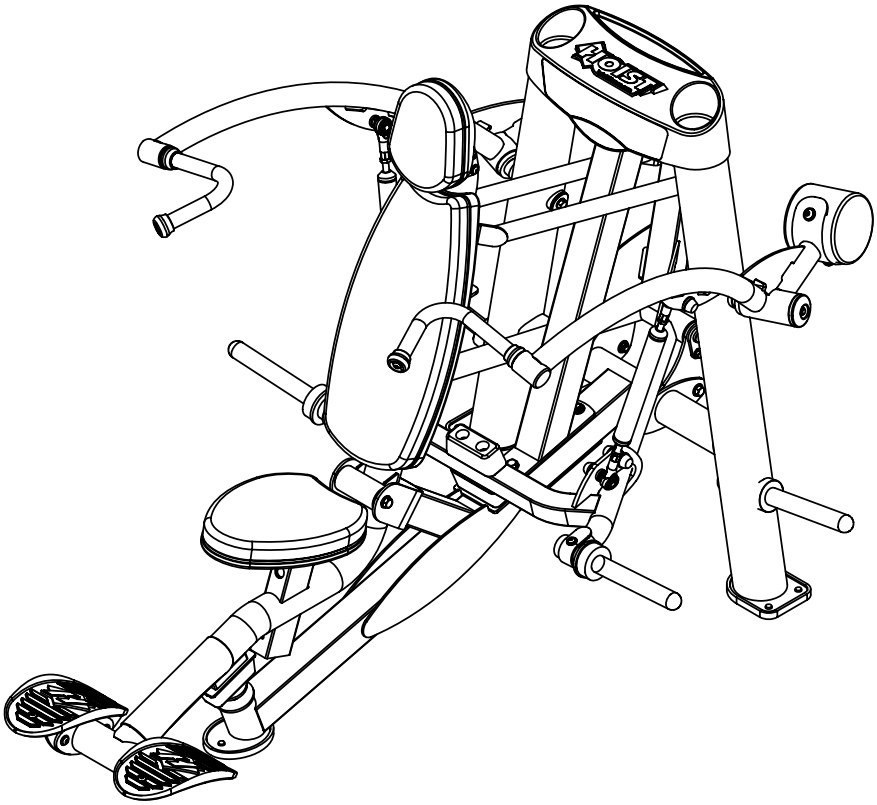

JUNE, 2008

Note: Both Serial Number and Model Number are Required when Ordering Parts

RECORD SERIAL NUMBER HERE

Customer Service

(800) 548-5438

(858) 578-7676

Fax

(858) 578-9558

MACHINE ADJUSTMENT

MAJOR ADJUSTMENT:

LOOSEN JAM NUT AND TWIST TIE RODS (12) IN/OUT TO ADJUST THE PRESS ARMS TO THE PROPER HEIGHT. ONCE THE PROPER HEIGHT IS REACHED AND THE PRESS ARMS ARE OF EQUAL HEIGHT, BE SURE TO RE-TIGHTEN JAM NUTS.

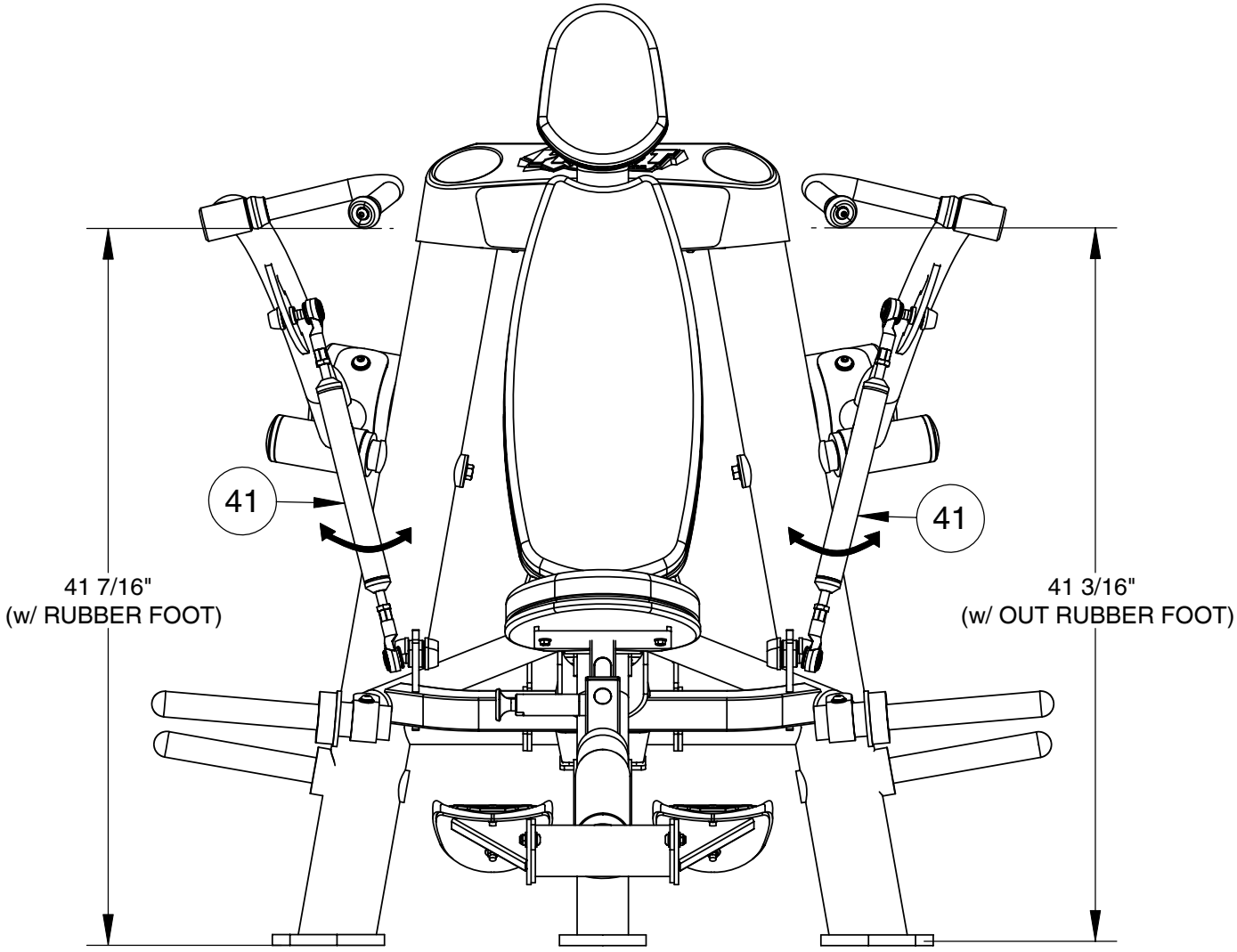

TWIST TIE RODS (12):

CLOCKWISE TO DECREASE PRESS ARM HEIGHT

OR

COUNTER-CLOCKWISE TO INCREASE PRESS ARM HEIGHT.

OWNER'S MANUAL

RPL-5501

PLATE-LOADED SHOULDER PRESS

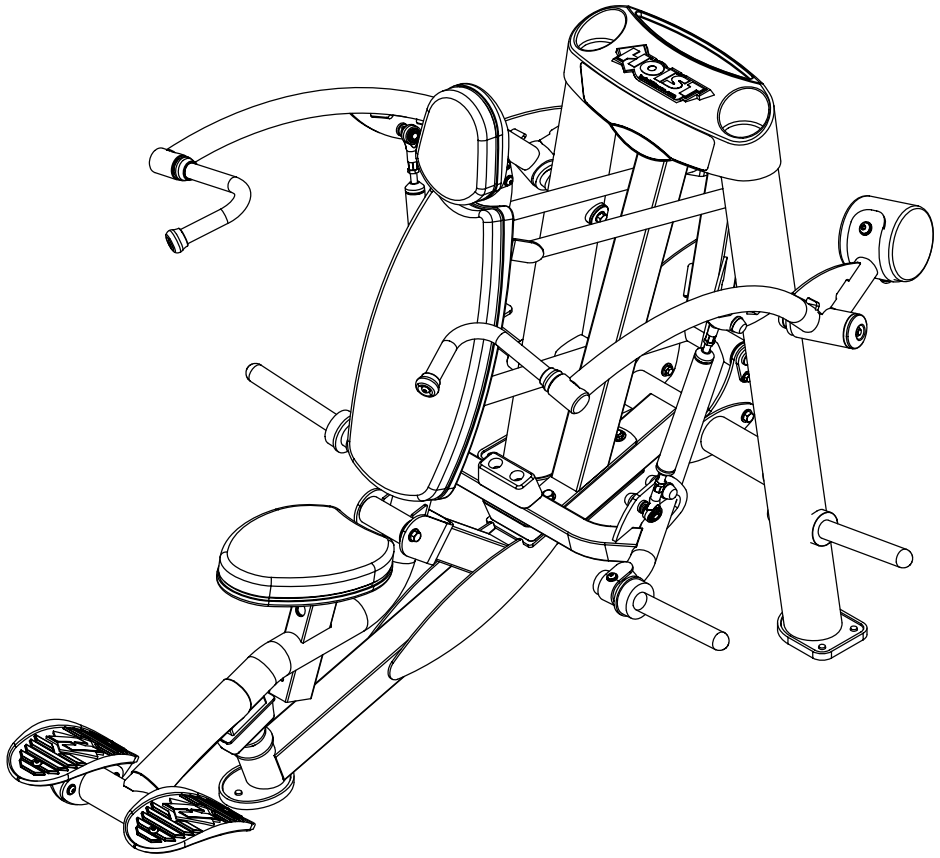

****WARNING!****

TO PREVENT POSSIBLE TIPPING, BOLT THIS UNIT TO THE EXERCISE FLOOR. FAILURE TO DO SO MAY RESULT IN SERIOUS INJURY OR DEATH.

Note: Both Serial Number and Model Number are Required when Ordering Parts

RECORD SERIAL NUMBER HERE

CATALOG NUMBER

0208 - 005

Customer Service

(800) 548-5438

(858) 578-7676

Fax

(858) 578-9558

CONTENTS

INSTRUCTIONS 02
FRAME ASSEMBLY 04
MACHINE ADJUSTMENT..... 28
PRE-ASSEMBLY..... 30
DECAL PLACEMENT..... 31
DECAL REFERENCE..... 32
PART LIST..... 33
ABBREVIATIONS..... 36
BOLT SIZING CHART..... 37
WASHER SIZING CHART..... 39
MAINTENANCE SCHEDULE..... 41
GENERAL MAINTENANCE INFORMATION..... 42
WEIGHT TRAINING TIPS..... 43
EXERCISE LOG..... 44
LIMITED WARRANTY..... 45

INSTRUCTIONS

Before beginning assembly please take the time to read instructions thoroughly. Please use the various lists in this manual to make sure that all parts have been included in your shipment. When ordering, use part number and description from the lists. Use only HOIST replacement parts when servicing. Failure to do so will void your warranty and could result in personal injury.

HOIST equipment is designed to provide the smoothest, most effective exercise motion possible. After assembly, you should check all functions to ensure correct operation. If you experience problems, first recheck the assembly instructions to locate any possible errors made during assembly. If you are unable to correct the problem, call your authorized HOIST dealer. Be sure to have your serial number and this manual when calling. When all parts have been accounted for, continue on.

TOOLS REQUIRED

Ratchet Wrench

1/2", 9/16" and 3/4" Sockets

Adjustable Wrench

Rubber Mallet

Tape Measure

Level

Hex Key Wrench Set

Two People

THIS PAGE WAS INTENTIONALLY LEFT BLANK

FRAME ASSEMBLY

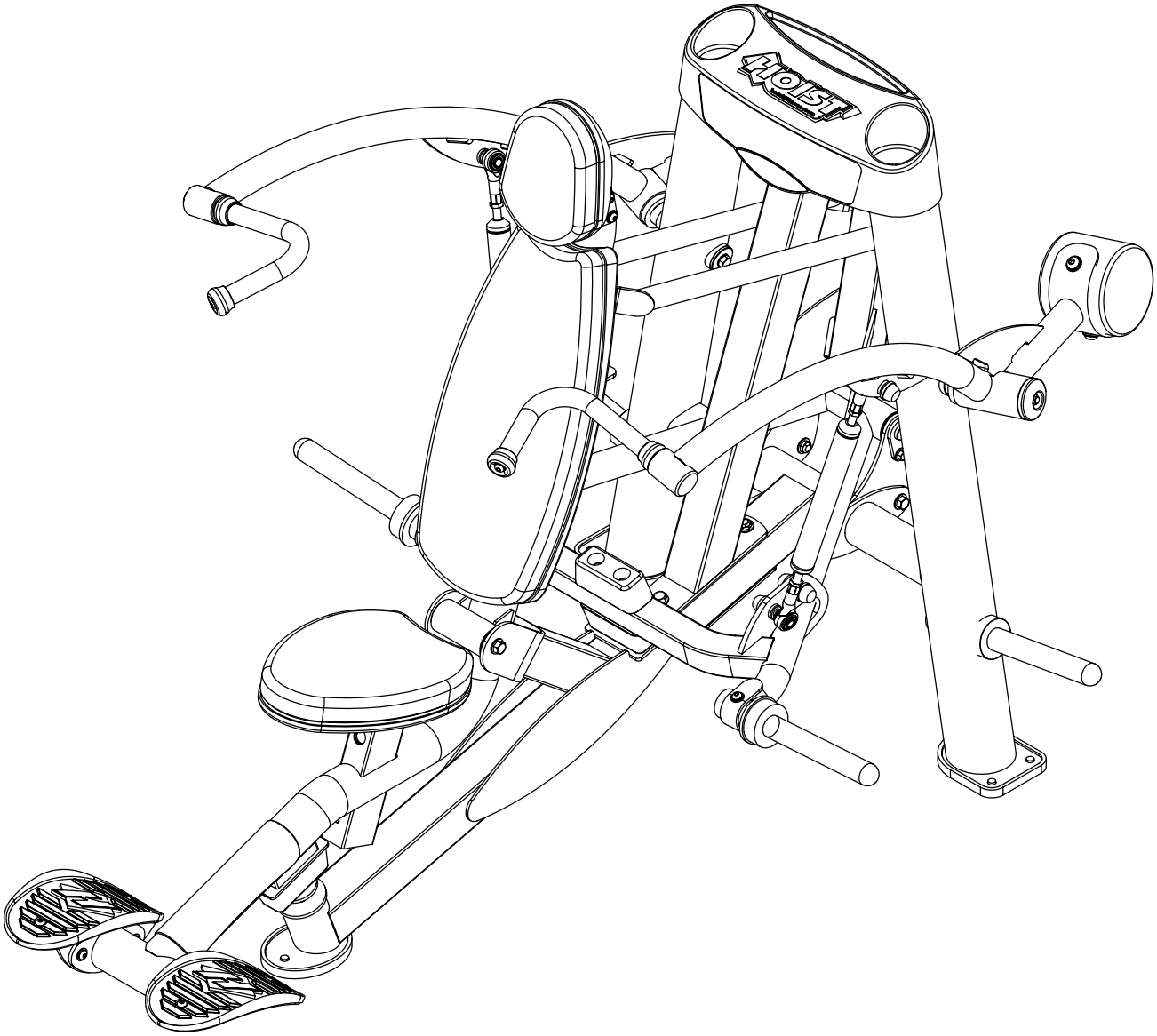

FRAME ASSEMBLY

NOTE:
- WRENCH TIGHTEN HARDWARE.

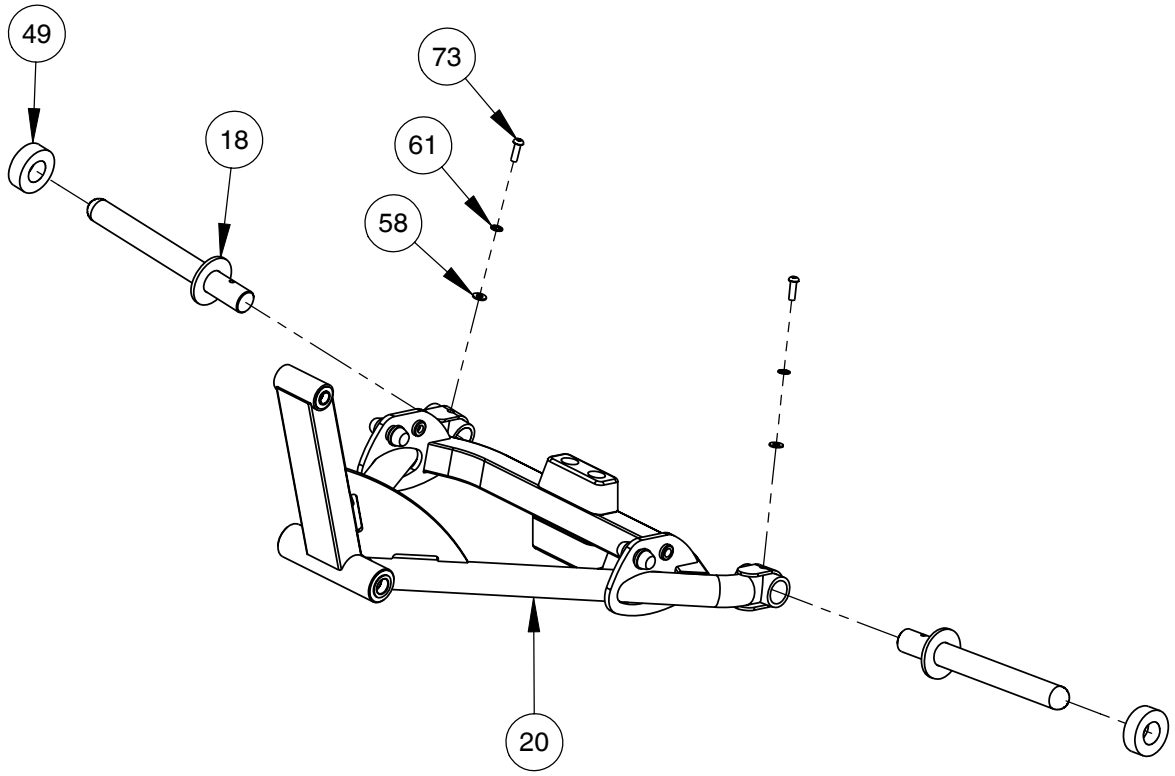

FRAME ASSEMBLY

NOTE:
- HAND TIGHTEN HARDWARE.

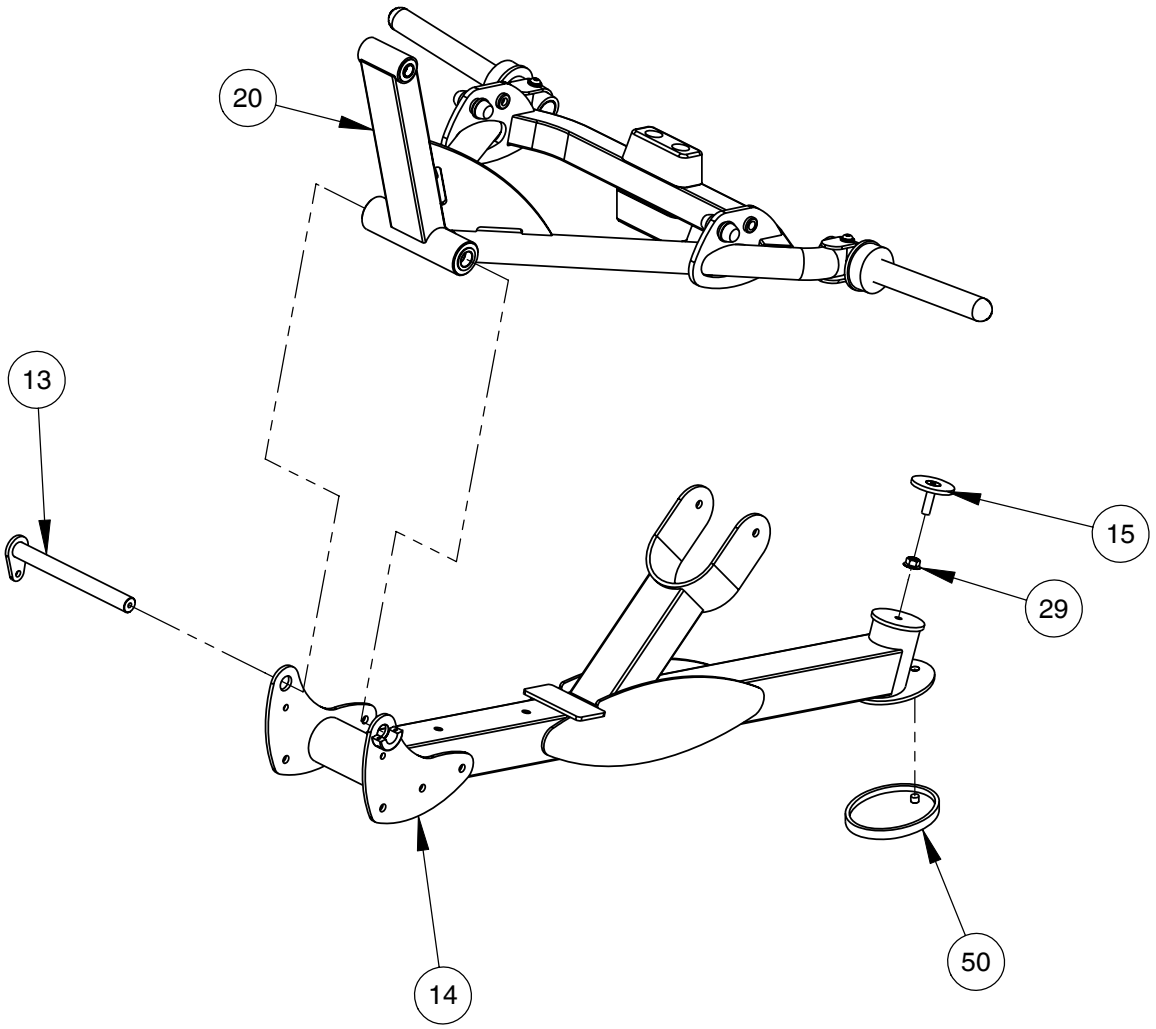

FRAME ASSEMBLY

NOTE:
- WRENCH TIGHTEN HARDWARE.

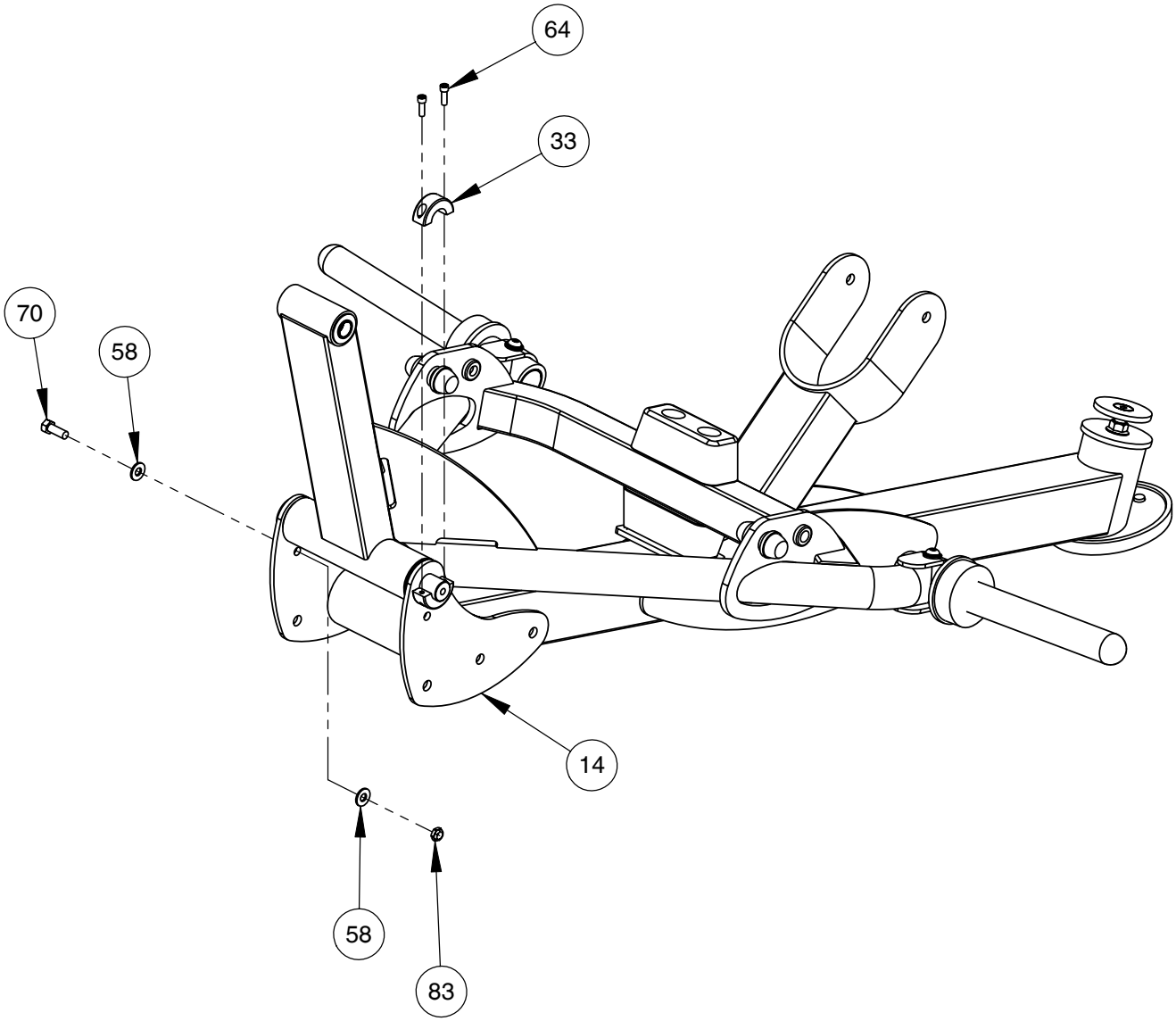

FRAME ASSEMBLY

NOTE:
- HAND TIGHTEN HARDWARE.

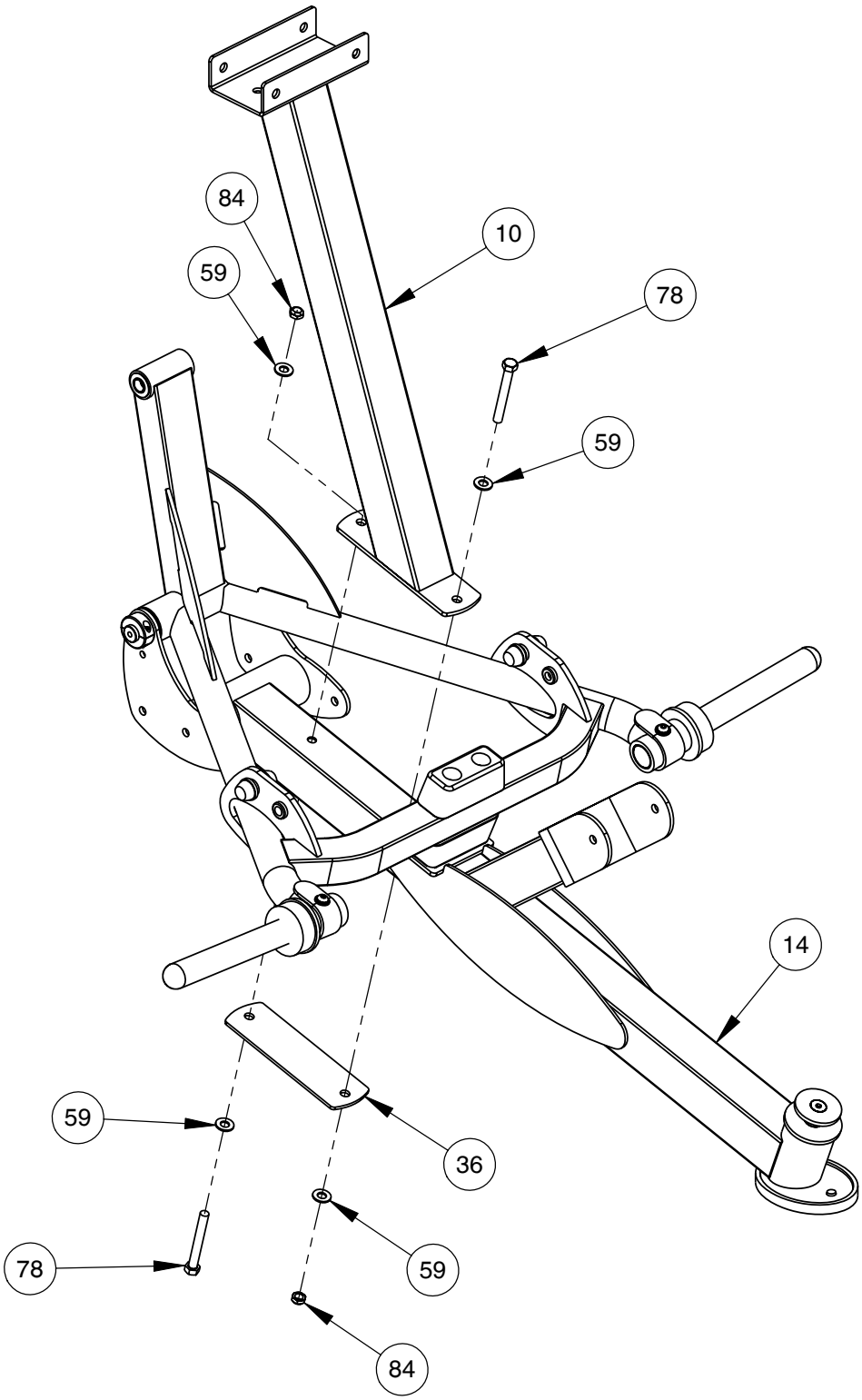

FRAME ASSEMBLY

NOTE:
- HAND TIGHTEN HARDWARE.

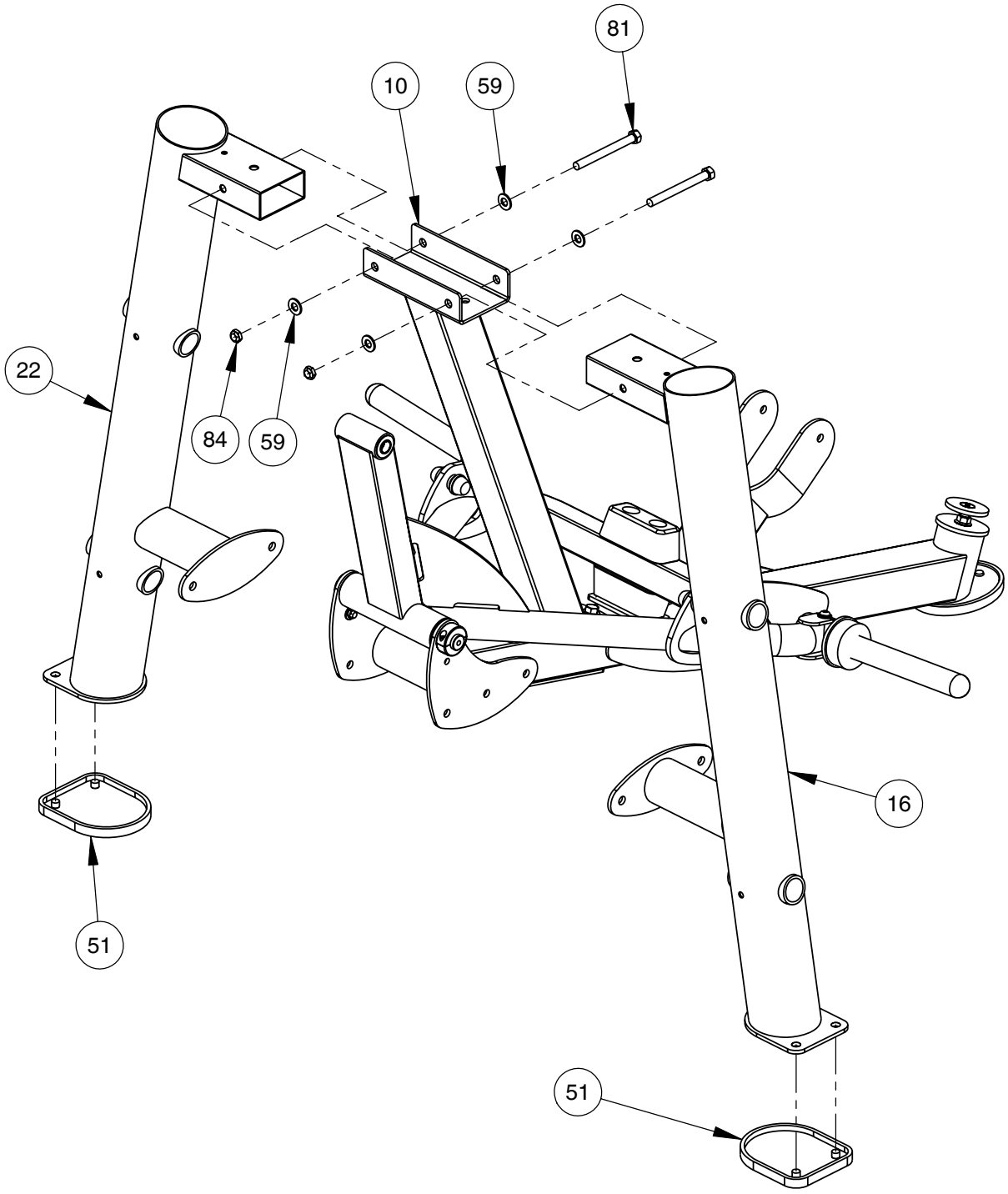

FRAME ASSEMBLY

NOTE:
- HAND TIGHTEN HARDWARE.
- REPEAT ASSEMBLY FOR OPPOSITE SIDE.

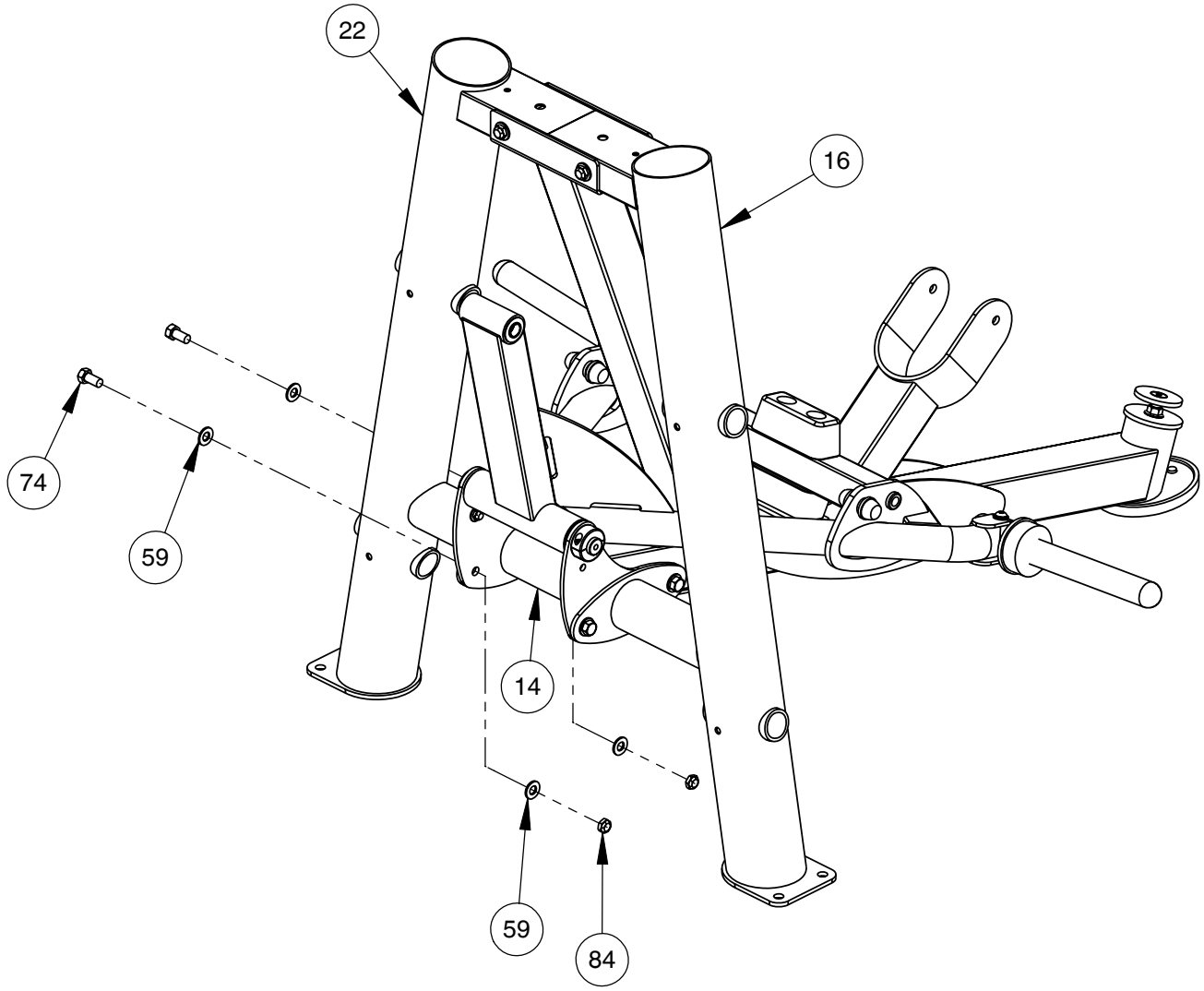

FRAME ASSEMBLY

NOTE:
- WRENCH TIGHTEN HARDWARE.

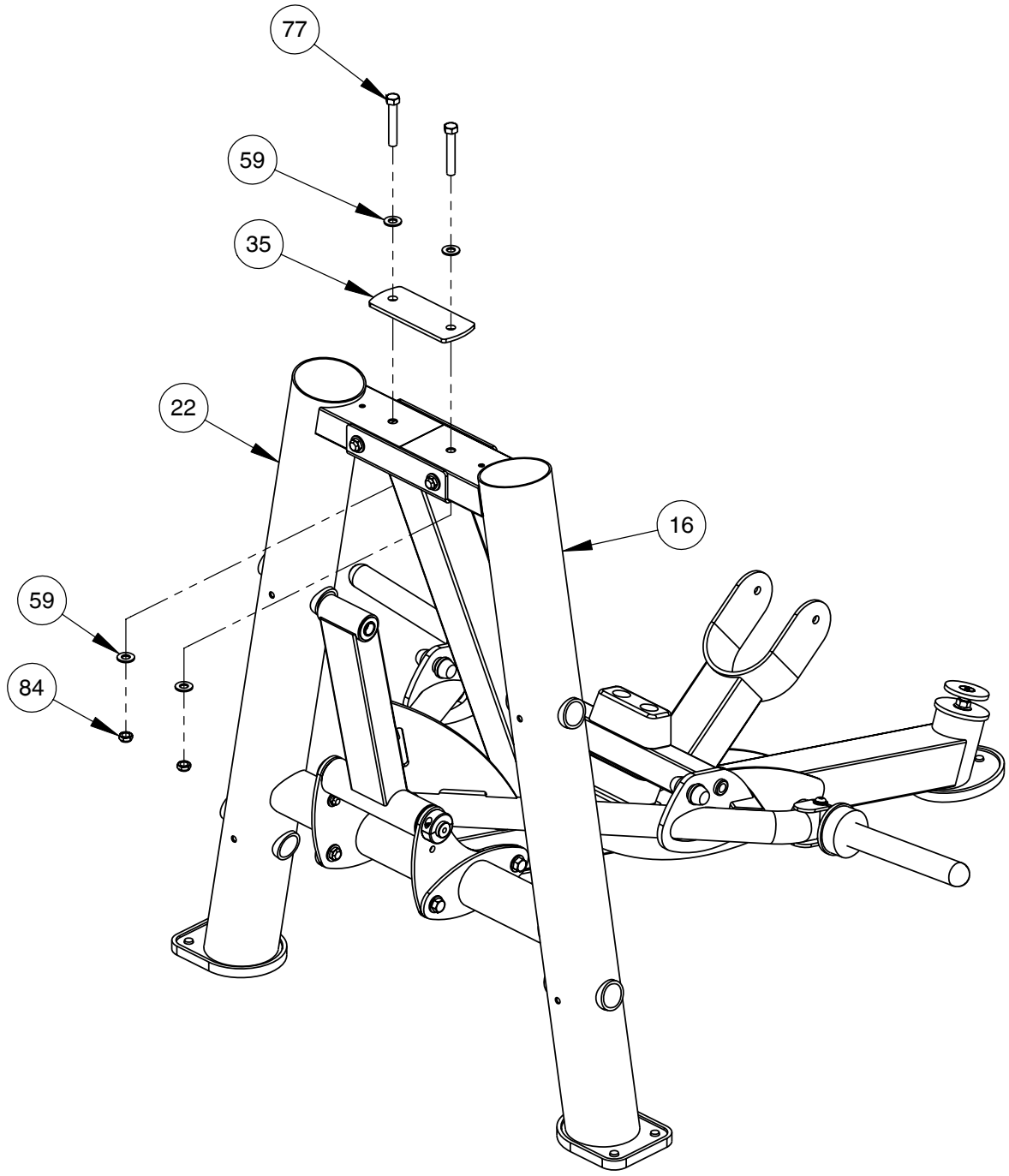

FRAME ASSEMBLY

NOTE:
- WRENCH TIGHTEN HARDWARE (82) THEN LOOSEN NUT JUST ENOUGH FOR (17) TO PIVOT FREELY.

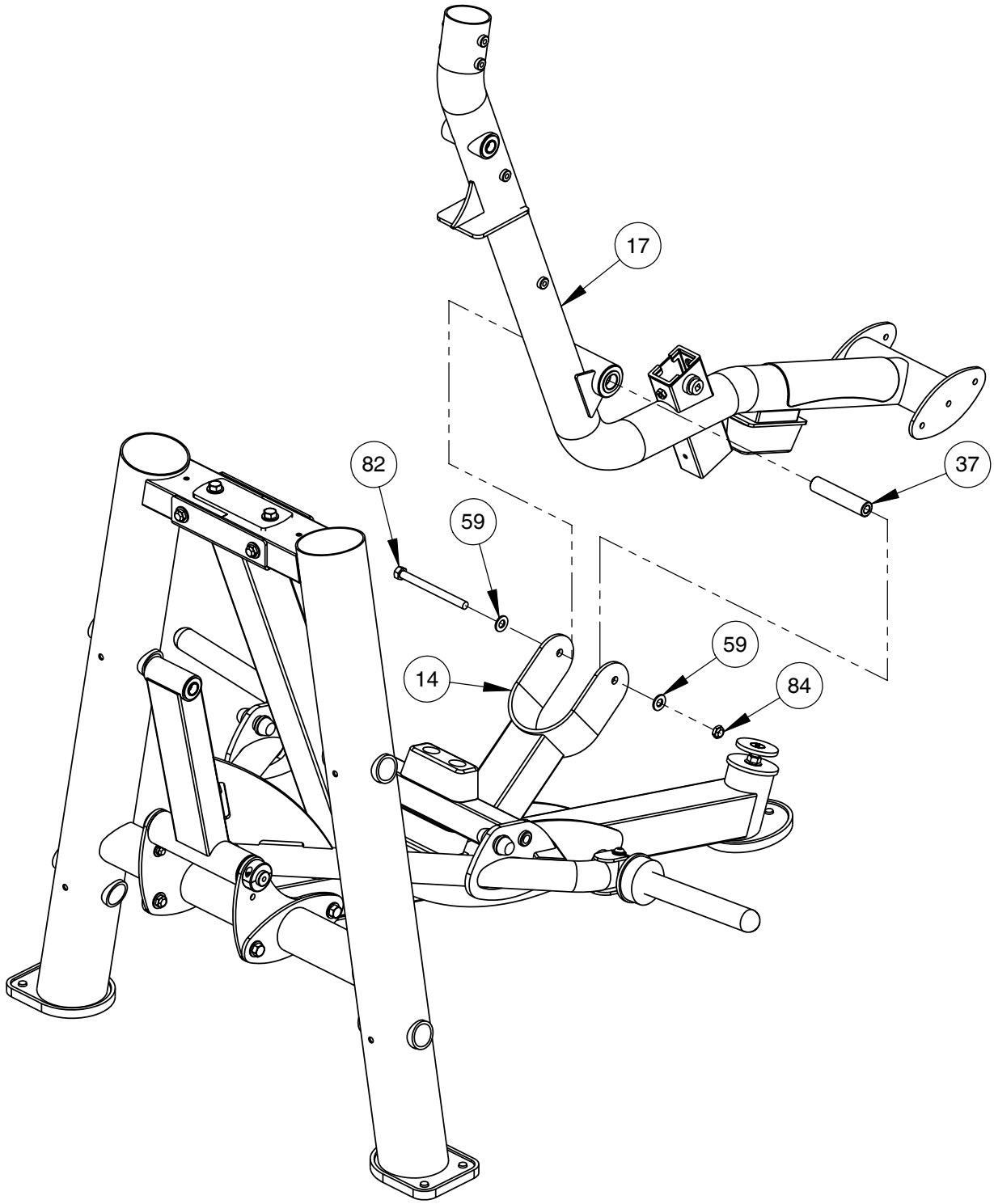

FRAME ASSEMBLY

NOTE:
- WRENCH TIGHTEN HARDWARE (80) THEN LOOSEN NUT JUST ENOUGH FOR (19) TO PIVOT FREELY.

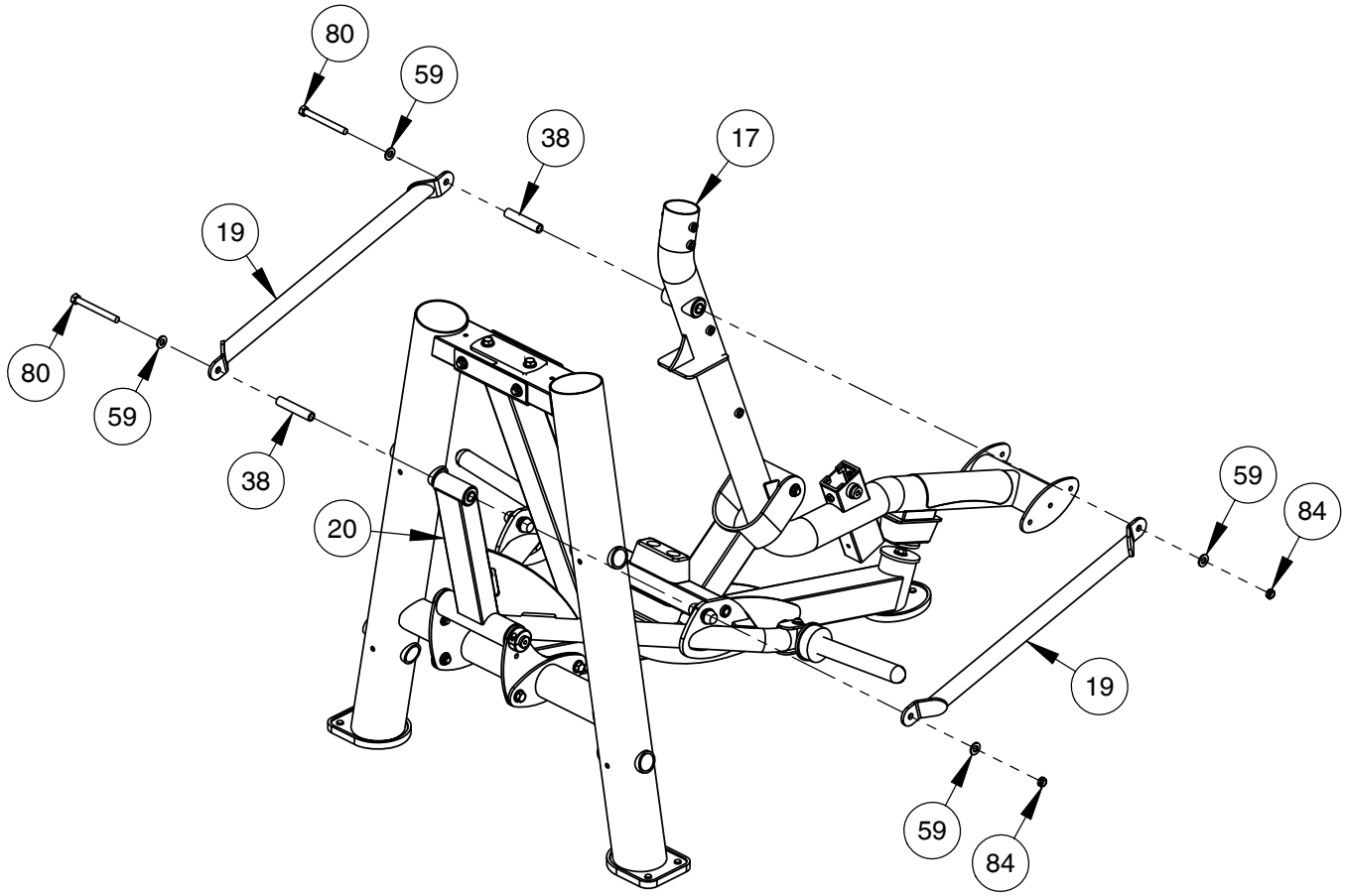

FRAME ASSEMBLY

NOTE:
- WRENCH TIGHTEN HARDWARE.
- REPEAT ASSEMBLY FOR OPPOSITE SIDE.
- SOME PARTS MAY HAVE BEEN REMOVED FOR CLARITY.

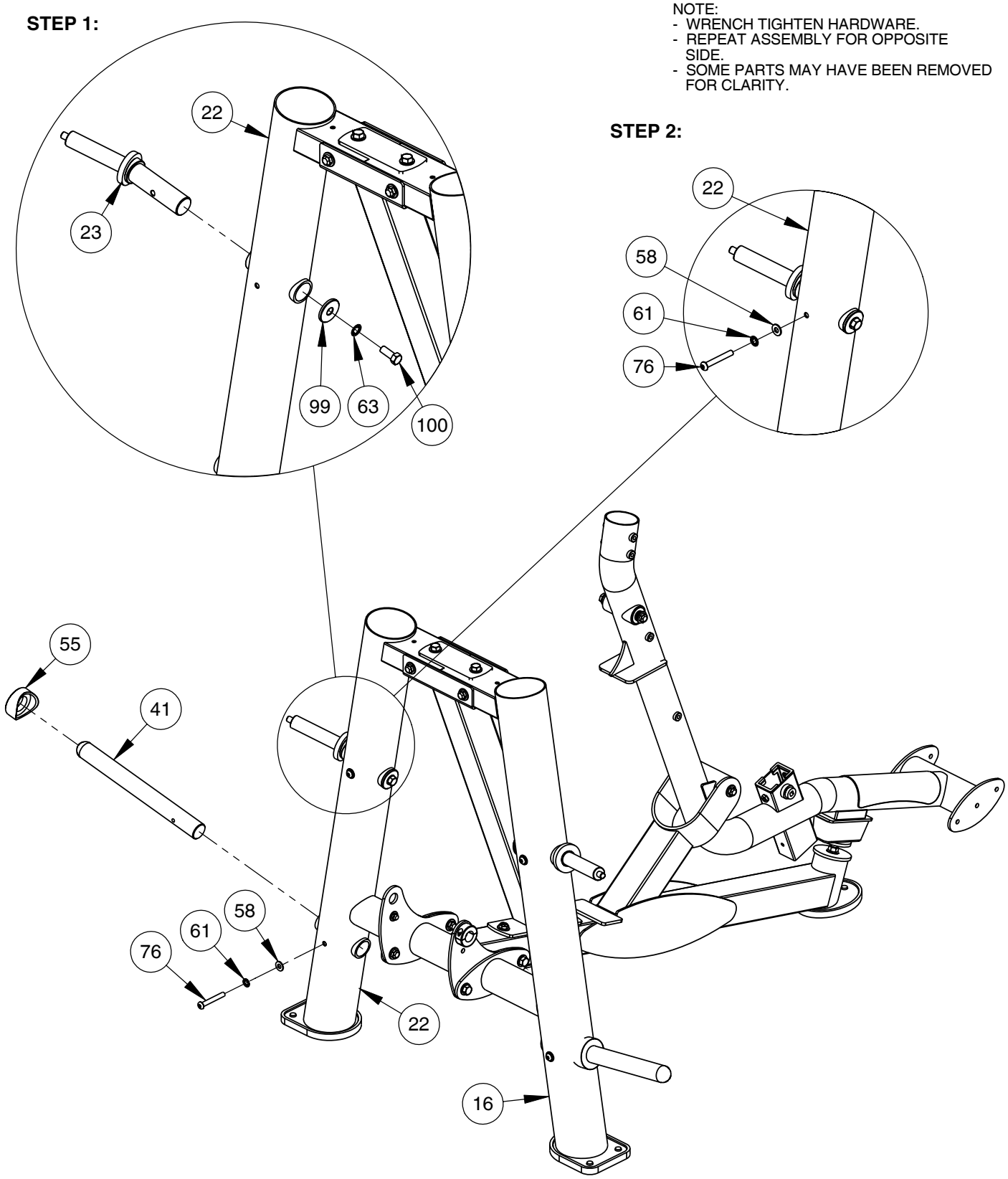

FRAME ASSEMBLY

NOTE:
- WRENCH TIGHTEN HARDWARE.
- REPEAT ASSEMBLY FOR OPPOSITE SIDE.

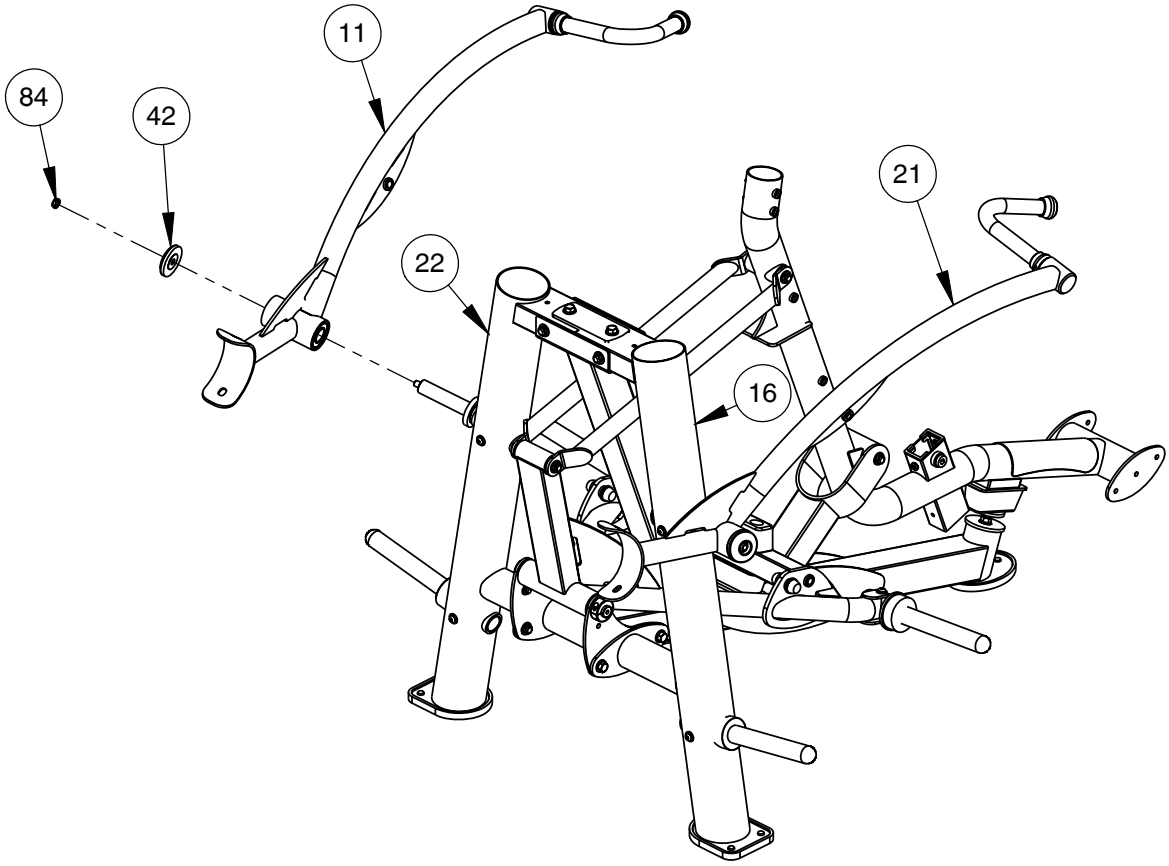

FRAME ASSEMBLY

NOTE:
- HAND TIGHTEN HARDWARE.

WARNING - TIE ROD ENDS (24, 25) MUST BE THREADED A MINIMUM OF 3/8" WITH JAM NUT (27, 28) TIGHTENED SECURELY TO ENSURE PROPER CONNECTION.

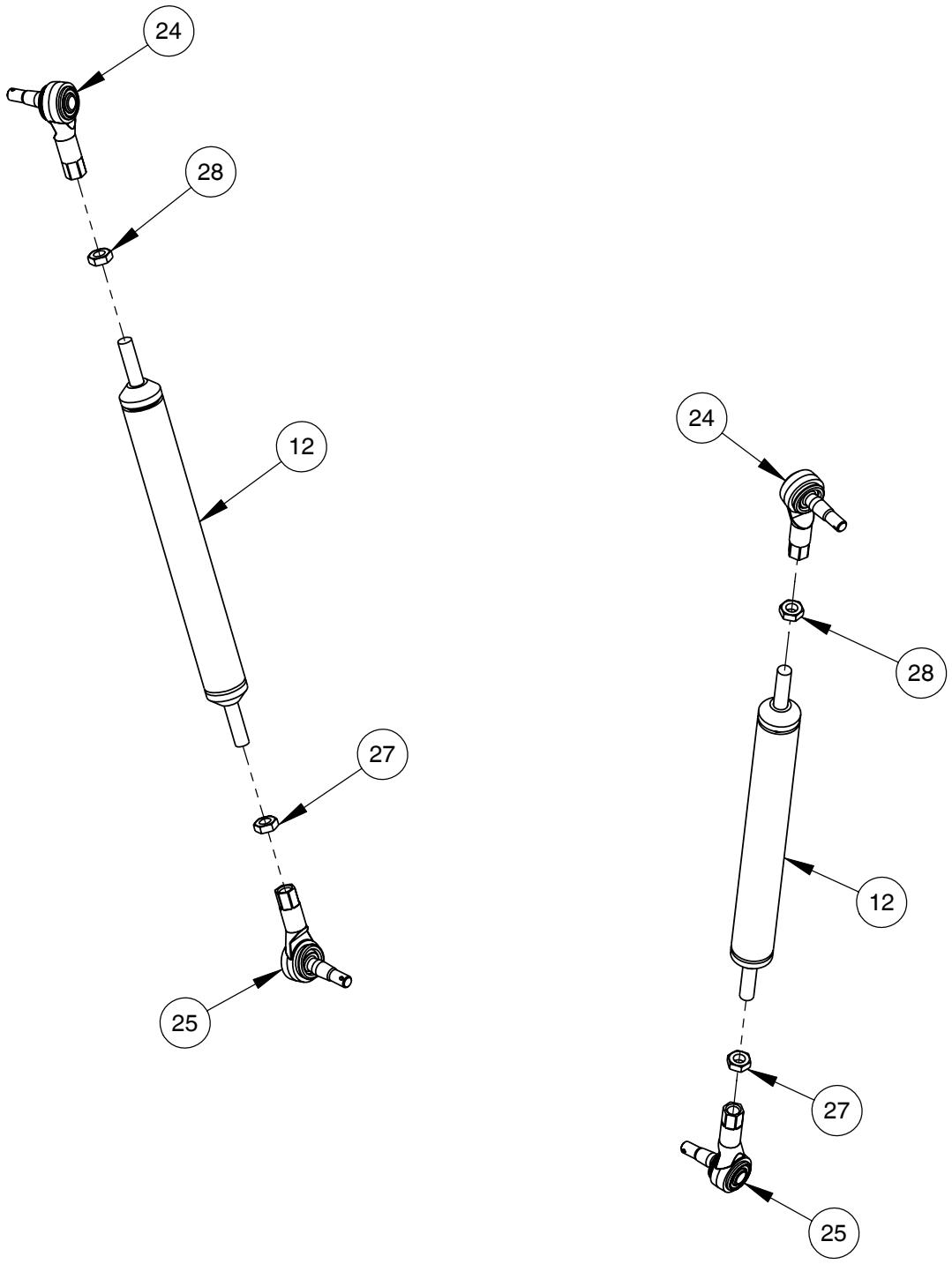

FRAME ASSEMBLY

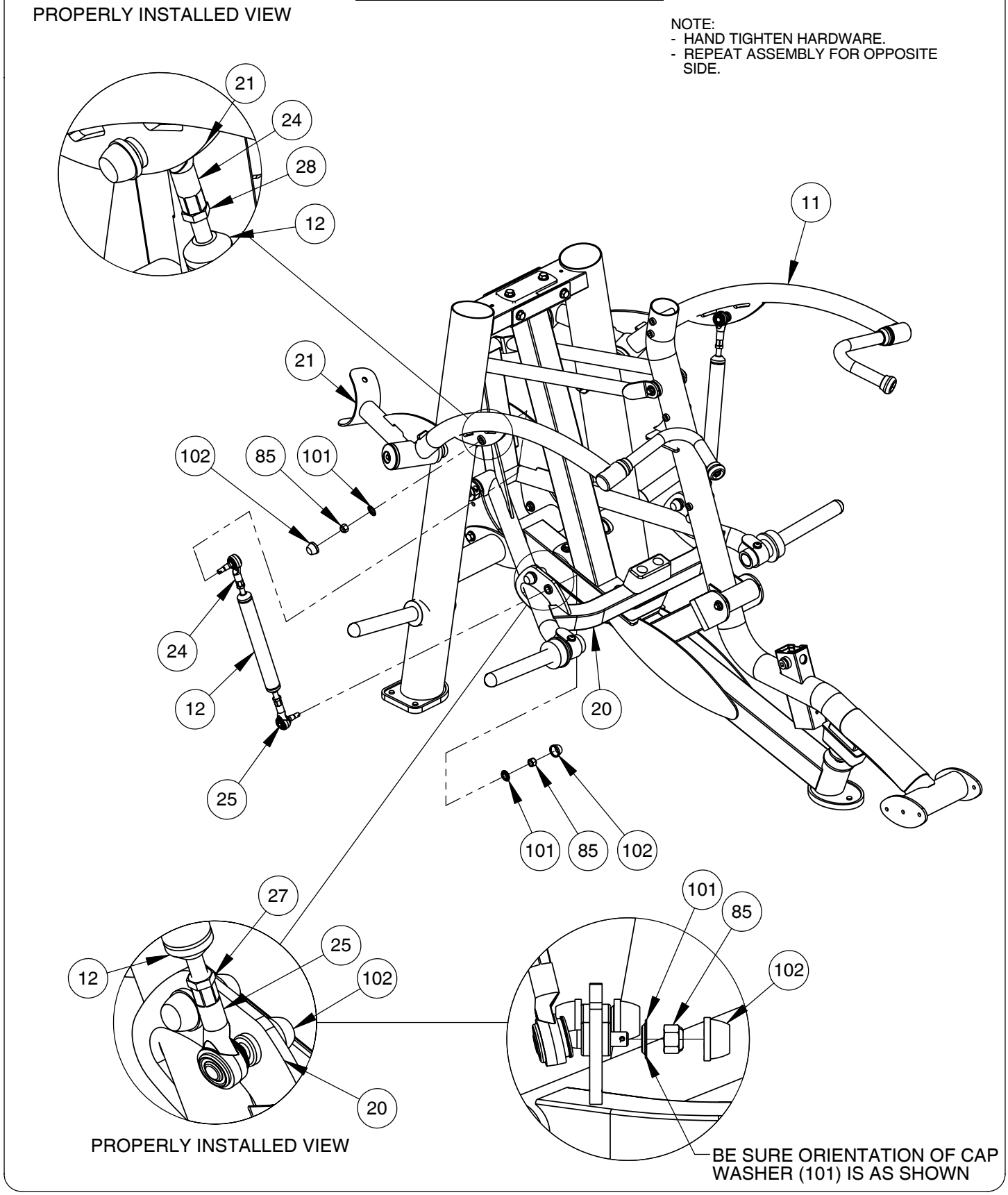

FRAME ASSEMBLY

NOTE:
- WRENCH TIGHTEN HARDWARE.
- REPEAT ASSEMBLY FOR OPPOSITE SIDE.

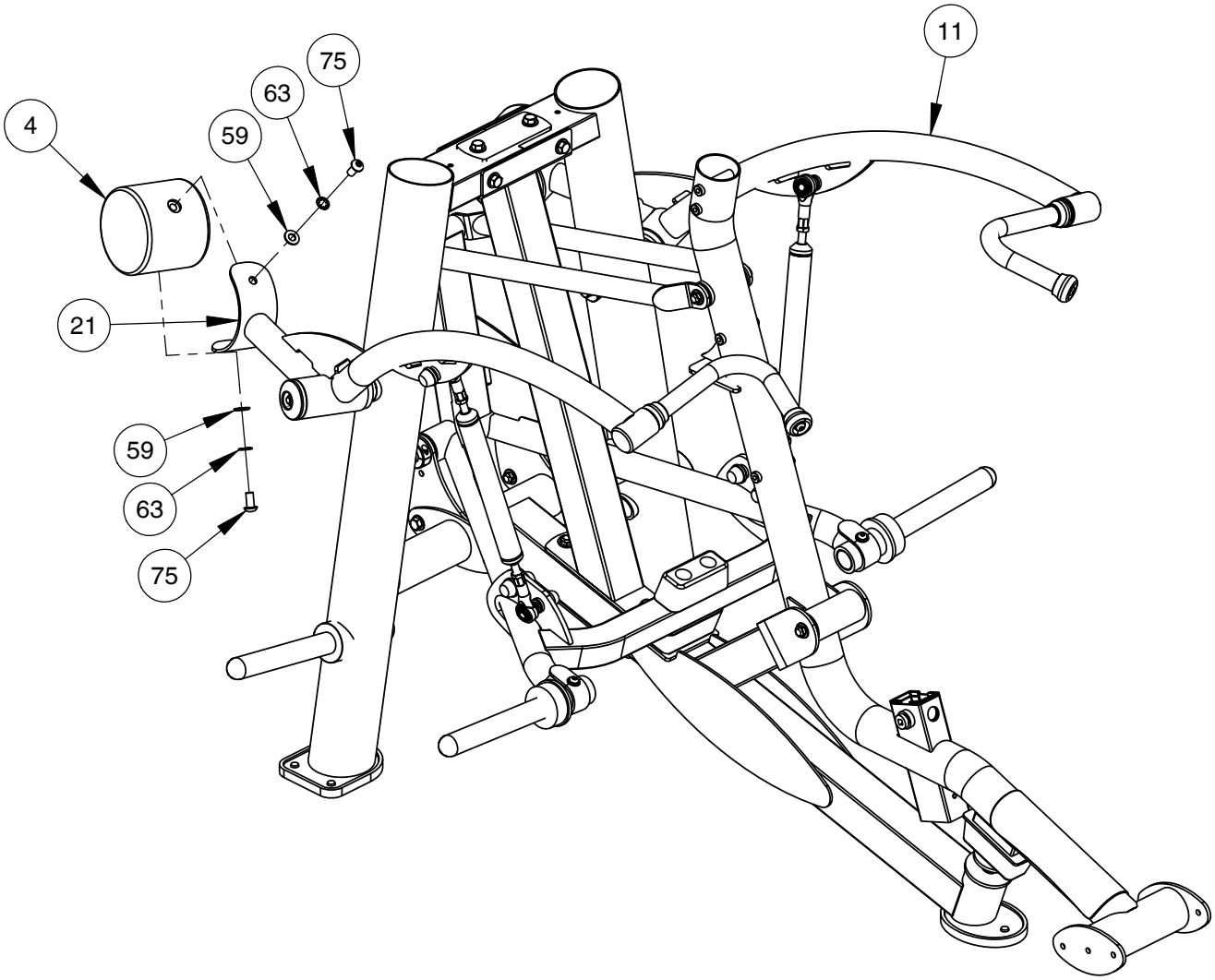

FRAME ASSEMBLY

NOTE:
- WRENCH TIGHTEN HARDWARE.
- SOME PARTS MAY HAVE BEEN REMOVED FOR CLARITY.

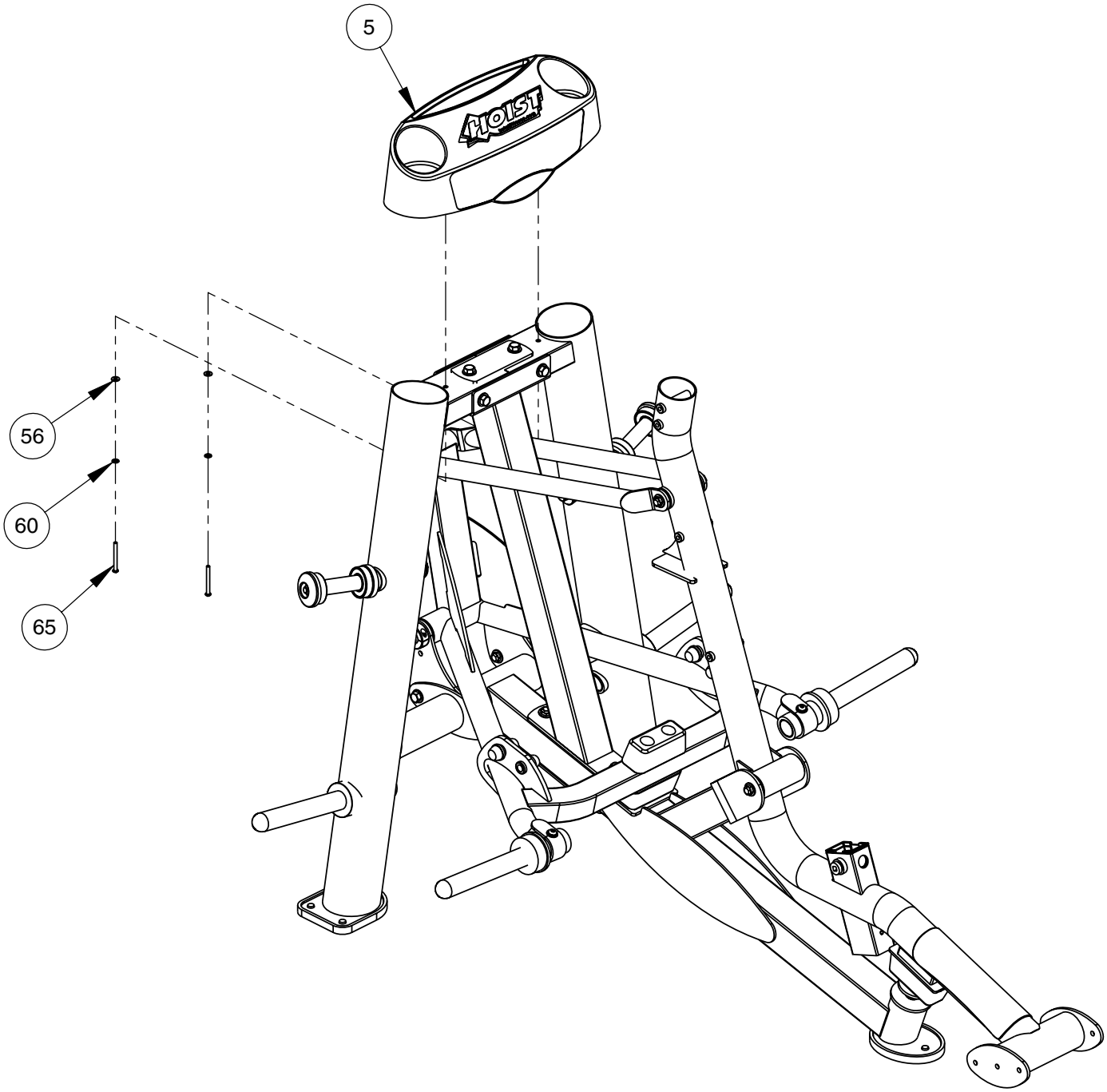

FRAME ASSEMBLY

NOTE:
- WRENCH TIGHTEN HARDWARE.
- REPEAT ASSEMBLY FOR OPPOSITE SIDE.
- SOME PARTS MAY HAVE BEEN REMOVED FOR CLARITY.

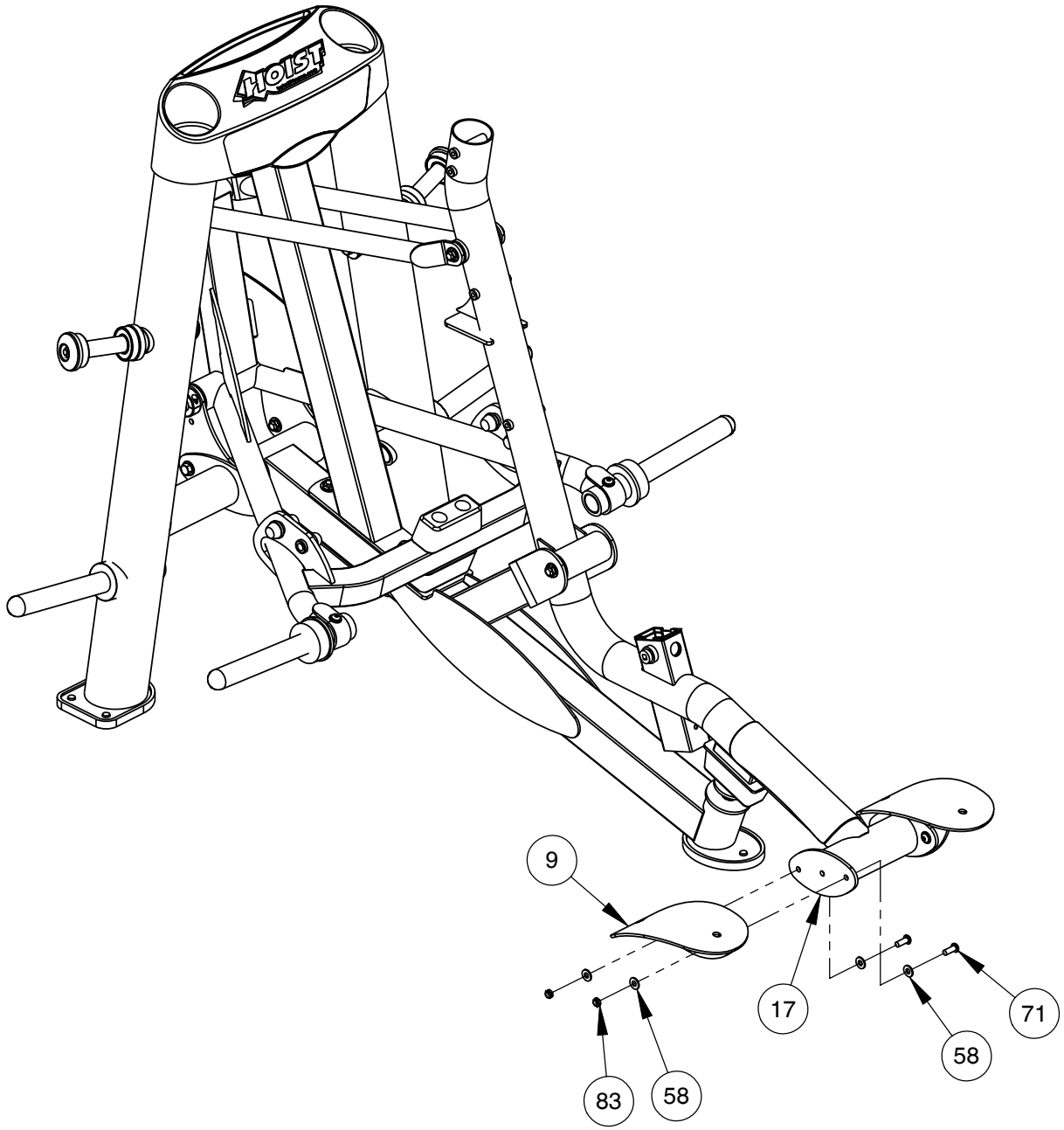

FRAME ASSEMBLY

NOTE:
- WRENCH TIGHTEN HARDWARE.
- REPEAT ASSEMBLY FOR OPPOSITE SIDE.
- SOME PARTS MAY HAVE BEEN REMOVED FOR CLARITY.

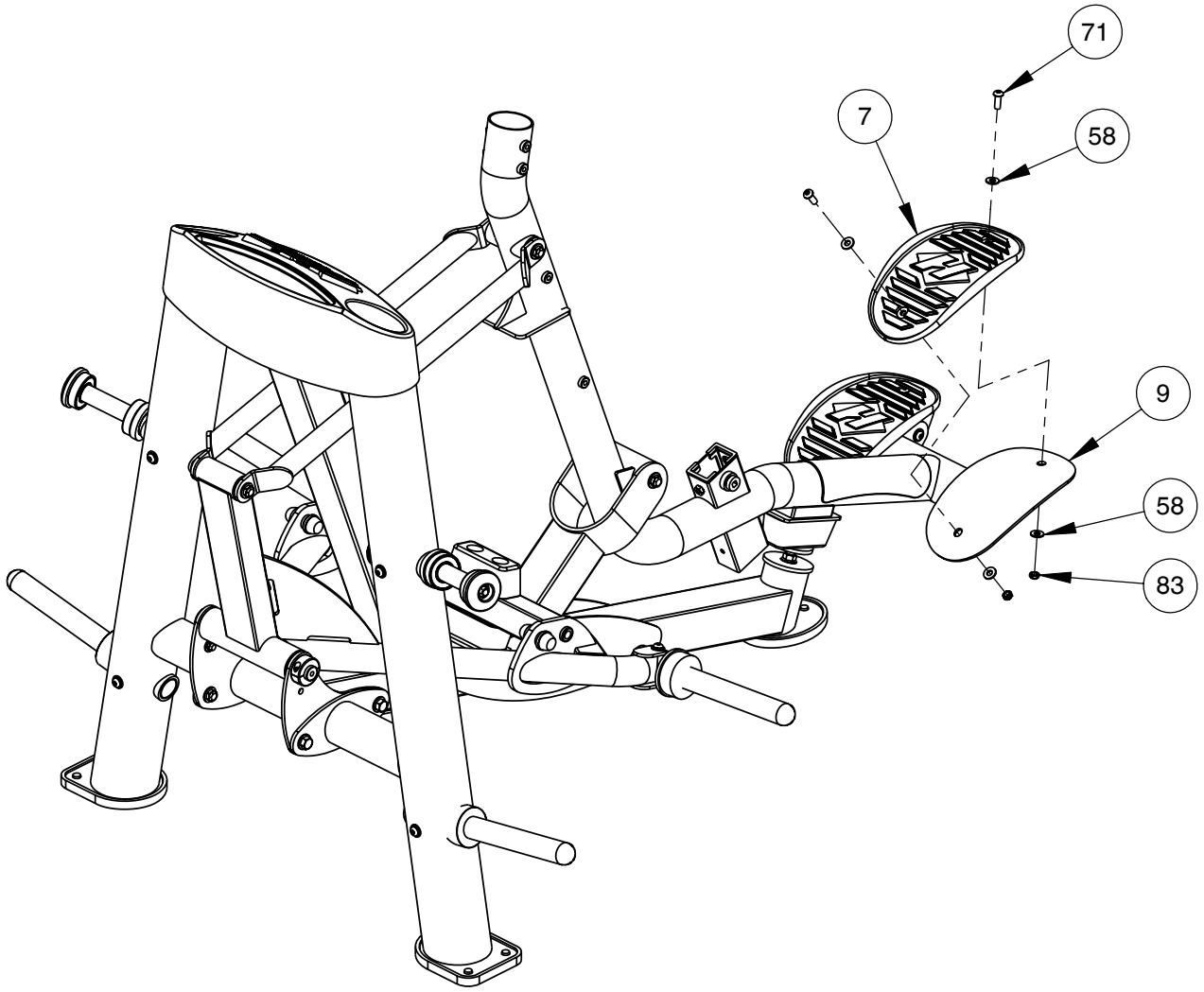

FRAME ASSEMBLY

NOTE:
- WRENCH TIGHTEN HARDWARE.
- SOME PARTS MAY HAVE BEEN REMOVED FOR CLARITY.

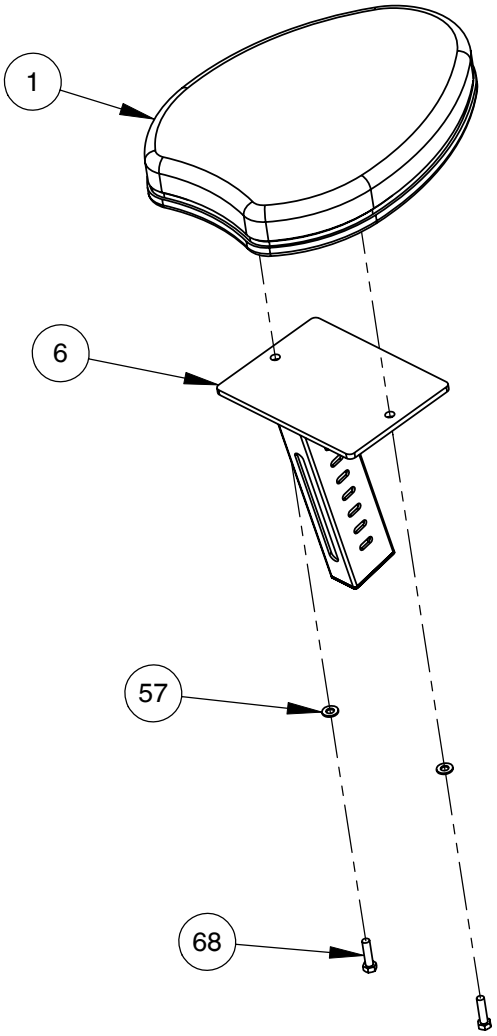

FRAME ASSEMBLY

NOTE:
- WRENCH TIGHTEN HARDWARE.
- SOME PARTS MAY HAVE BEEN REMOVED FOR CLARITY.

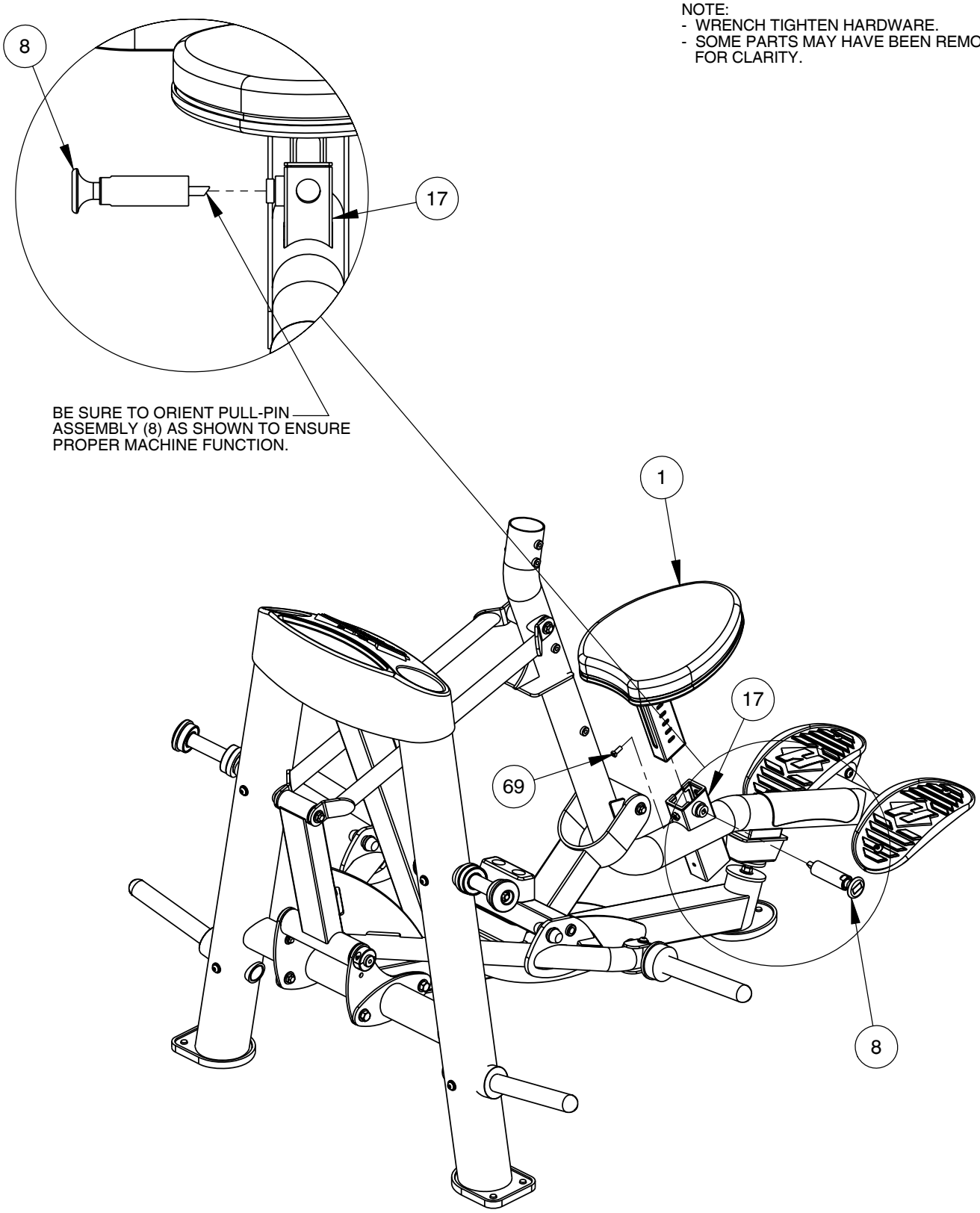

FRAME ASSEMBLY

NOTE:
- WRENCH TIGHTEN HARDWARE.
- SOME PARTS MAY HAVE BEEN REMOVED FOR CLARITY.

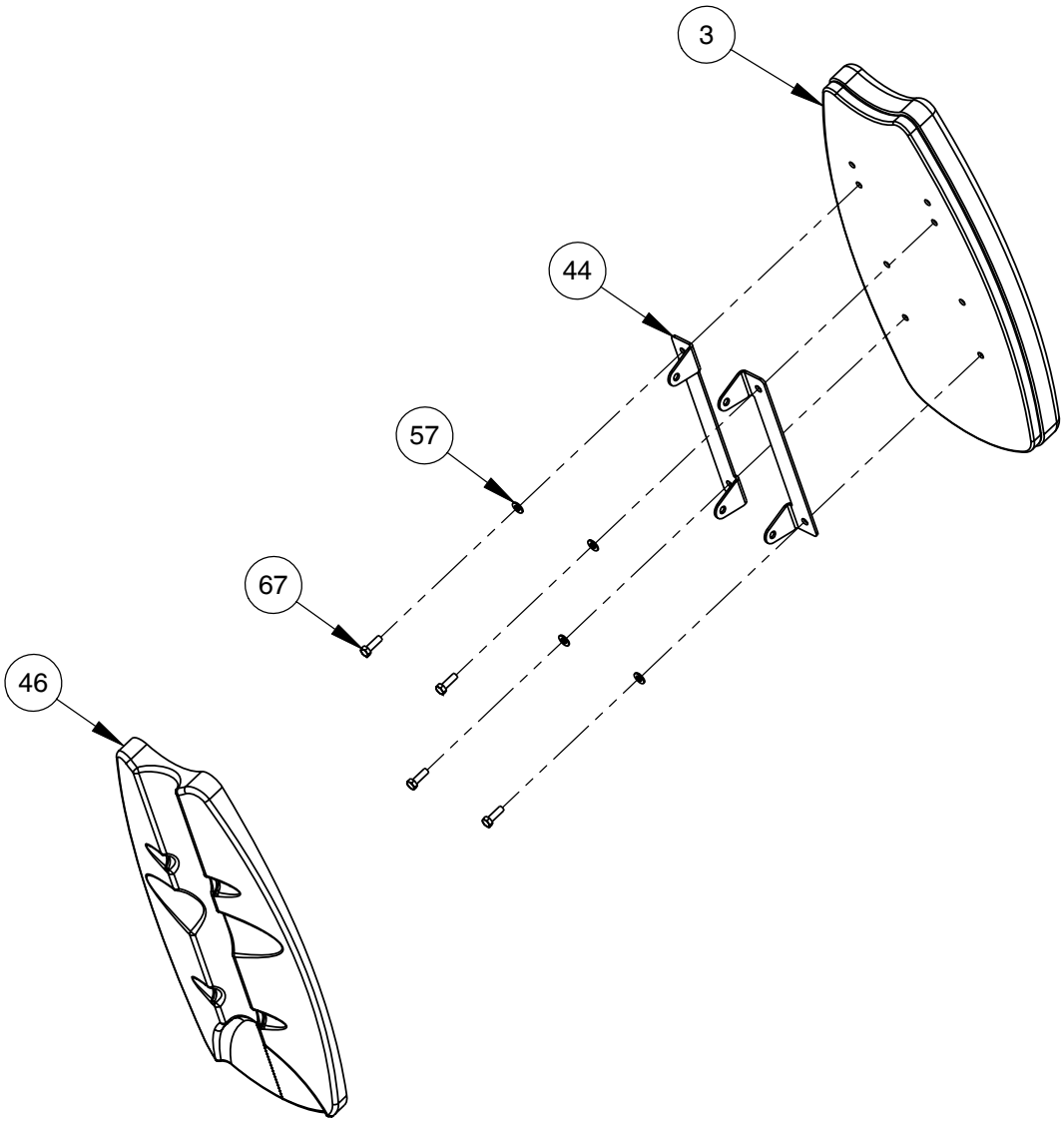

FRAME ASSEMBLY

NOTE:
- WRENCH TIGHTEN HARDWARE.
- SOME PARTS MAY HAVE BEEN REMOVED FOR CLARITY.

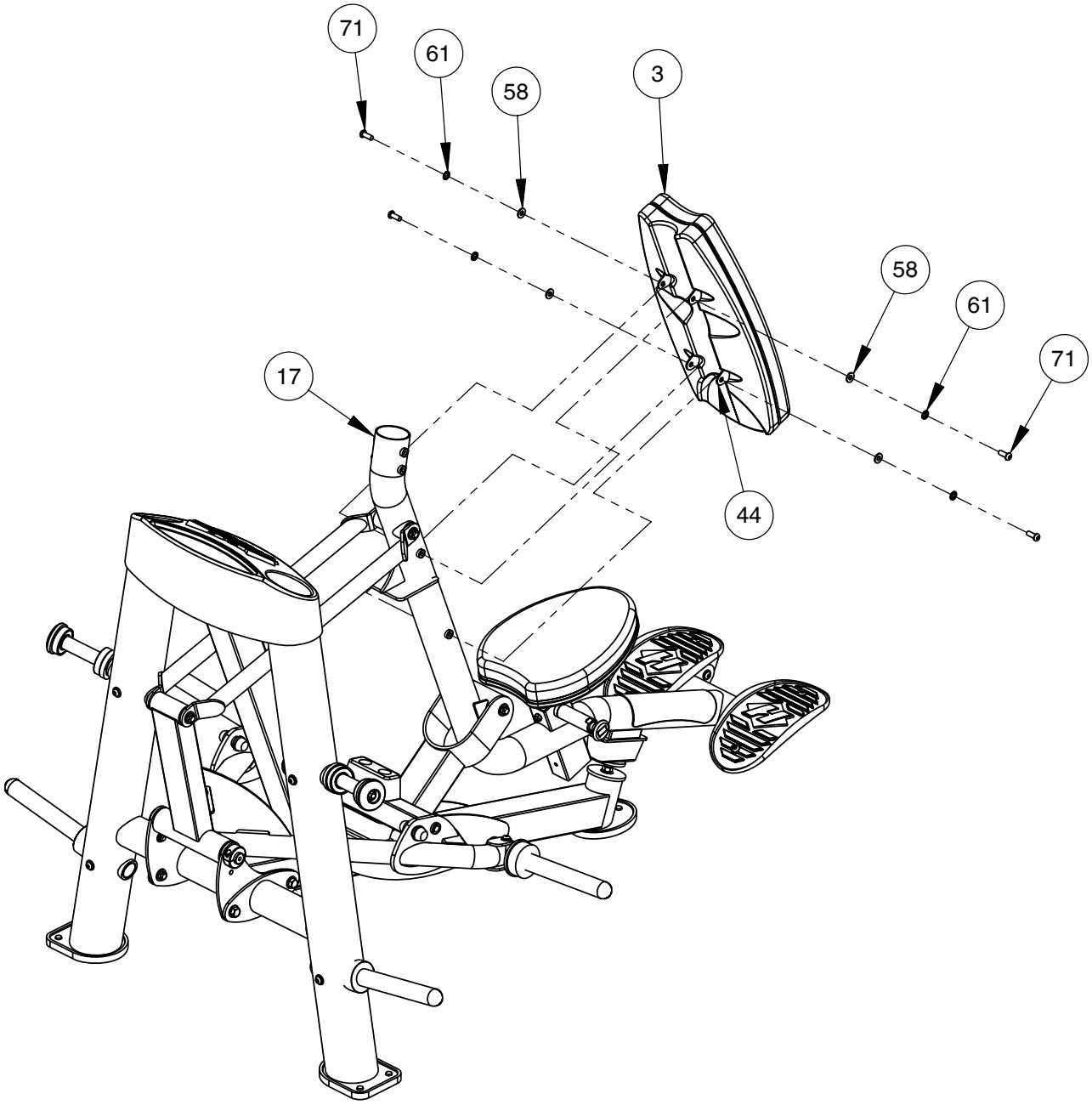

FRAME ASSEMBLY

NOTE:
- WRENCH TIGHTEN HARDWARE.
- SOME PARTS MAY HAVE BEEN REMOVED FOR CLARITY.

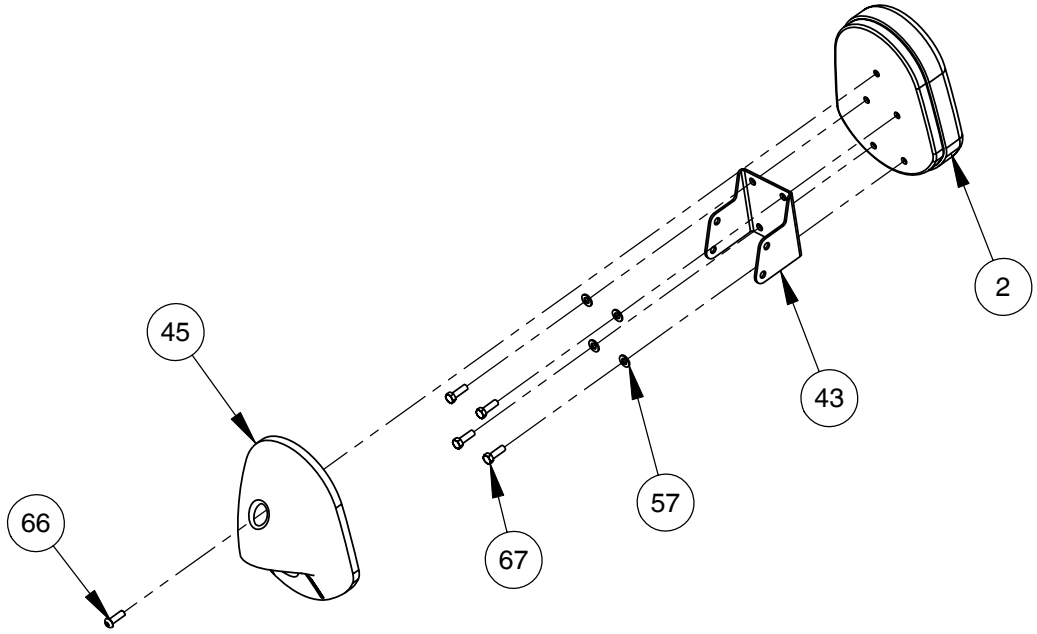

FRAME ASSEMBLY

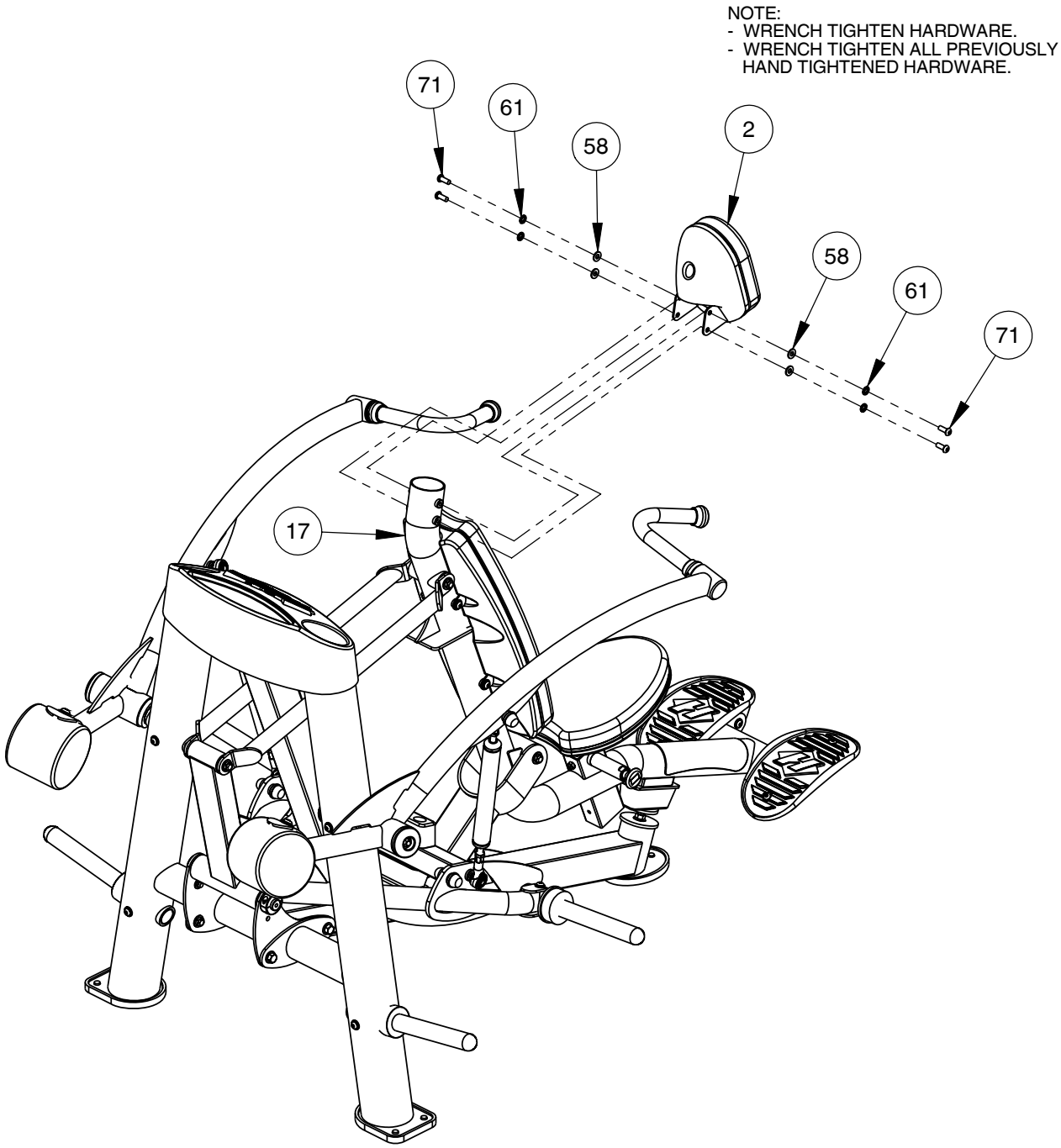

IMPORTANT

NOW THAT THE RPL-5501 IS COMPLETELY ASSEMBLED TAKE TIME TO ASSURE THAT YOUR UNIT IS ASSEMBLED SQUARE AND PERPENDICULAR. IF NOT, IT WILL BE NECESSARY TO LOOSEN SOME FRAME HARDWARE TO RE-ALIGN THE FRAME AND RETIGHTEN BOLTS.

MACHINE ADJUSTMENT

MAJOR ADJUSTMENT:

LOOSEN JAM NUT AND TWIST TIE RODS (12) IN/OUT TO ADJUST THE PRESS ARMS TO THE PROPER HEIGHT. ONCE THE PROPER HEIGHT IS REACHED AND THE PRESS ARMS ARE OF EQUAL HEIGHT, BE SURE TO RE-TIGHTEN JAM NUTS.

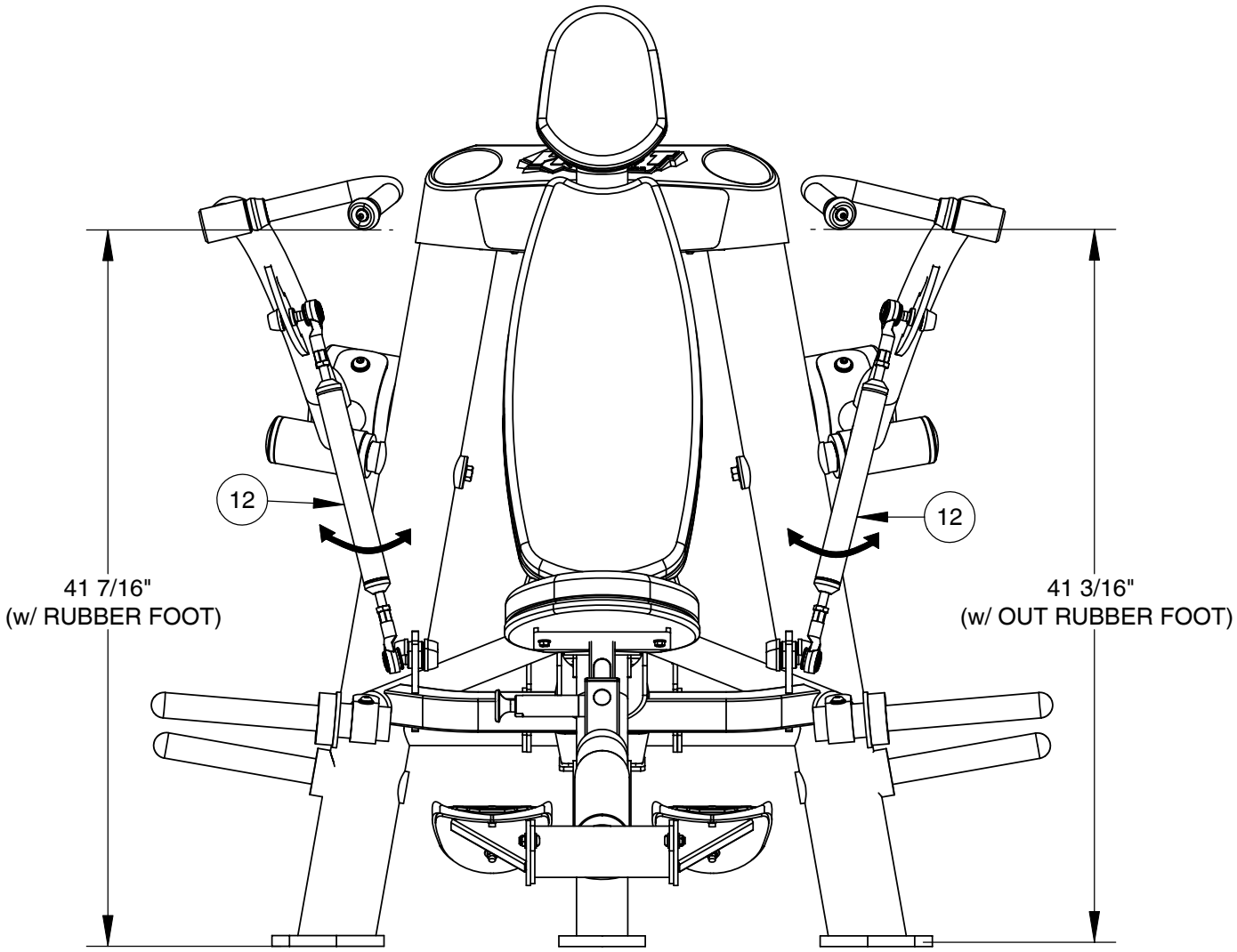

TWIST TIE RODS (12):

CLOCKWISE TO DECREASE PRESS ARM HEIGHT

OR

COUNTER-CLOCKWISE TO INCREASE PRESS ARM HEIGHT.

MACHINE ADJUSTMENT

MAJOR ADJUSTMENT:

BE SURE THE BOTTOM DUAL HOLE BUMPER (54) OF THE LIFT ARM ASSEMBLY REMAINS IN CONTACT WITH BASE FRAME ASSEMBLY (14), AS SHOWN IN DETAIL A.

ADJUST HEIGHT OF LIMITING STOP ASSEMBLY (15) SO THAT IT IS IN CONTACT WITH THE DUAL HOLE BUMPER (54), AS SHOWN IN DETAIL B. ONCE LIMITING STOP IS PROPERLY ADJUSTED, WRENCH TIGHTEN JAM NUT (29).

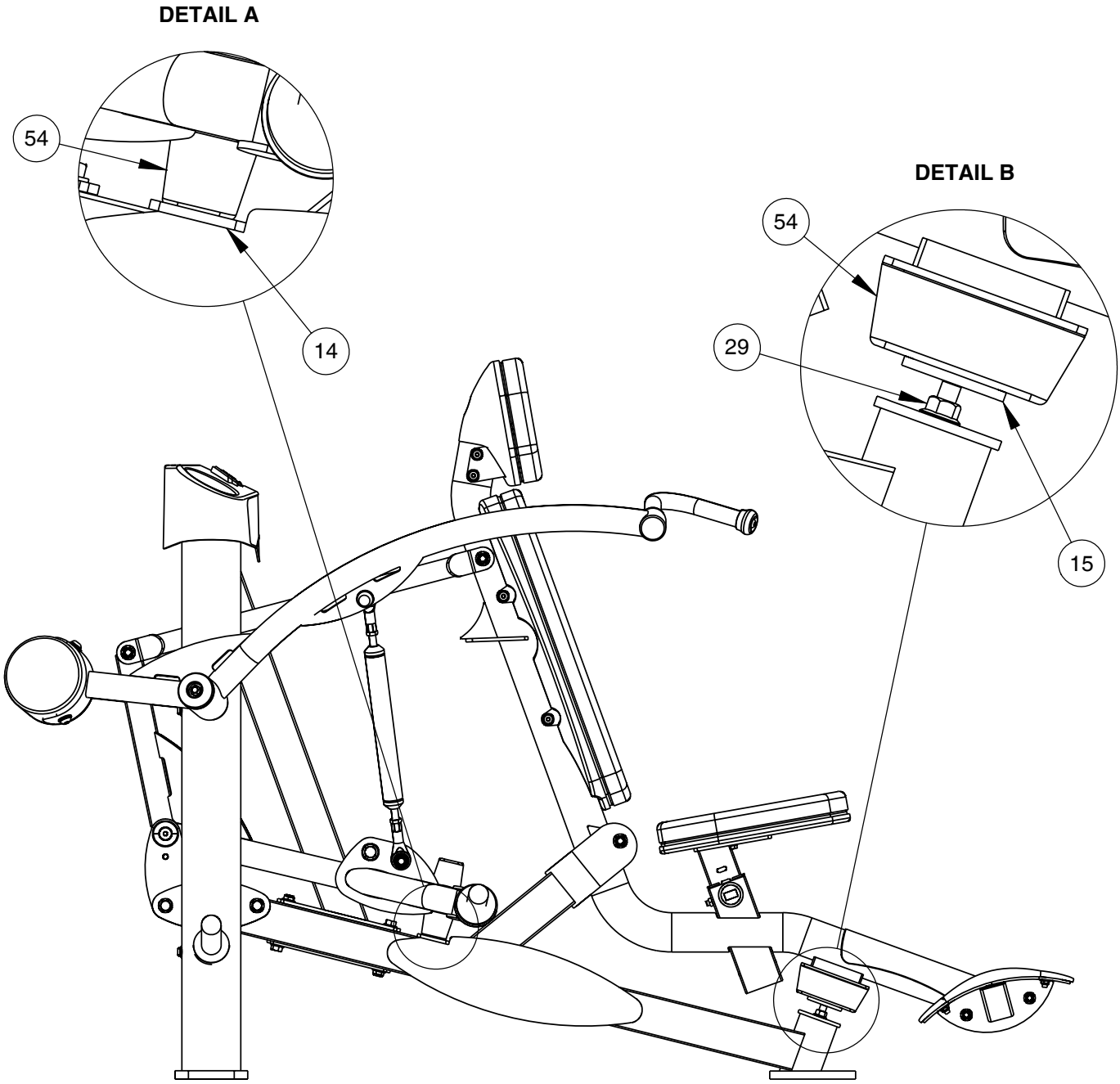

PRE-ASSEMBLY

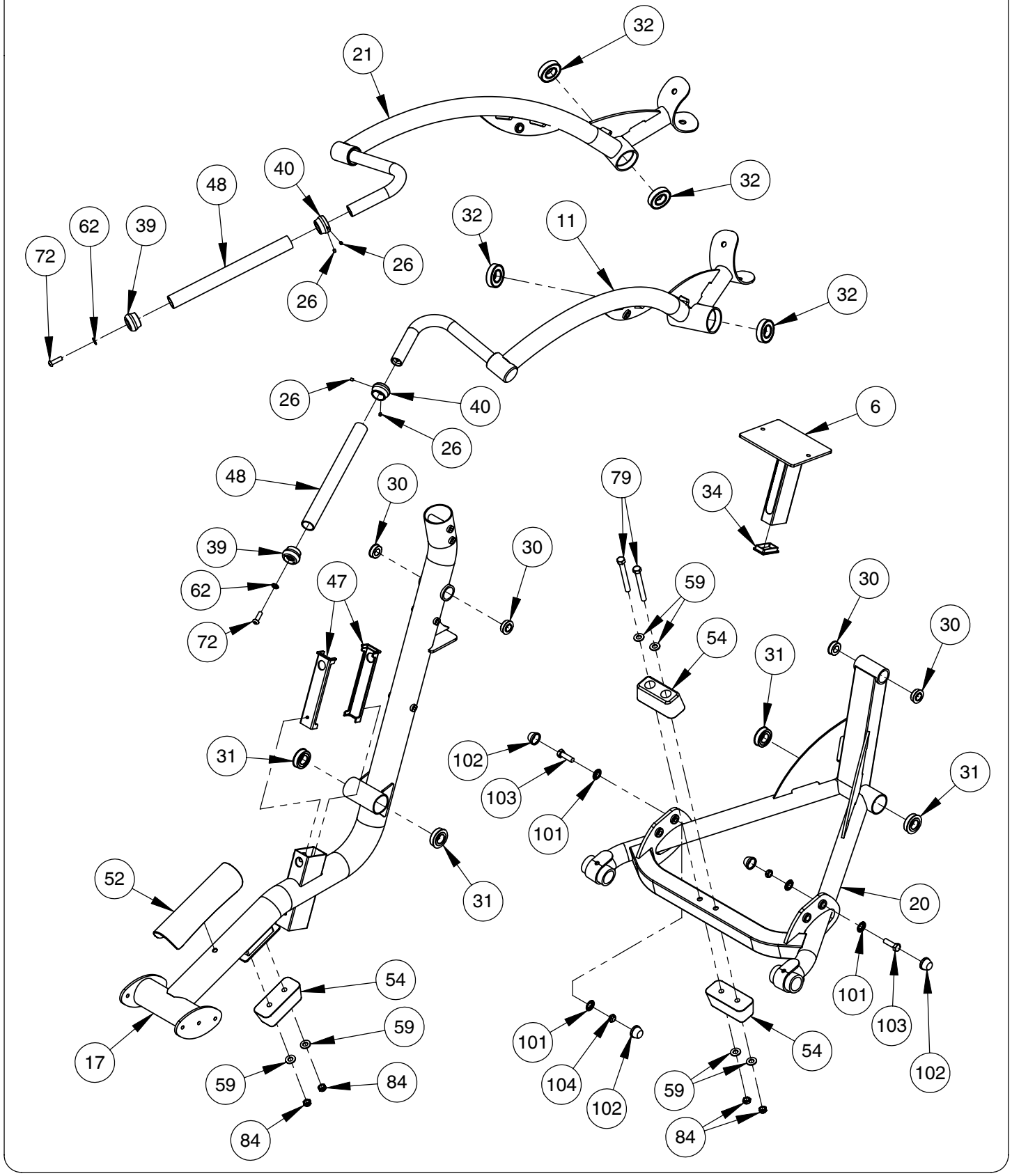

DECAL PLACEMENT

NOTE:
- ALL DECALS ARE CENTERED UNLESS OTHERWISE STATED.
- SOME PARTS MAY HAVE BEEN REMOVED FOR CLARITY.

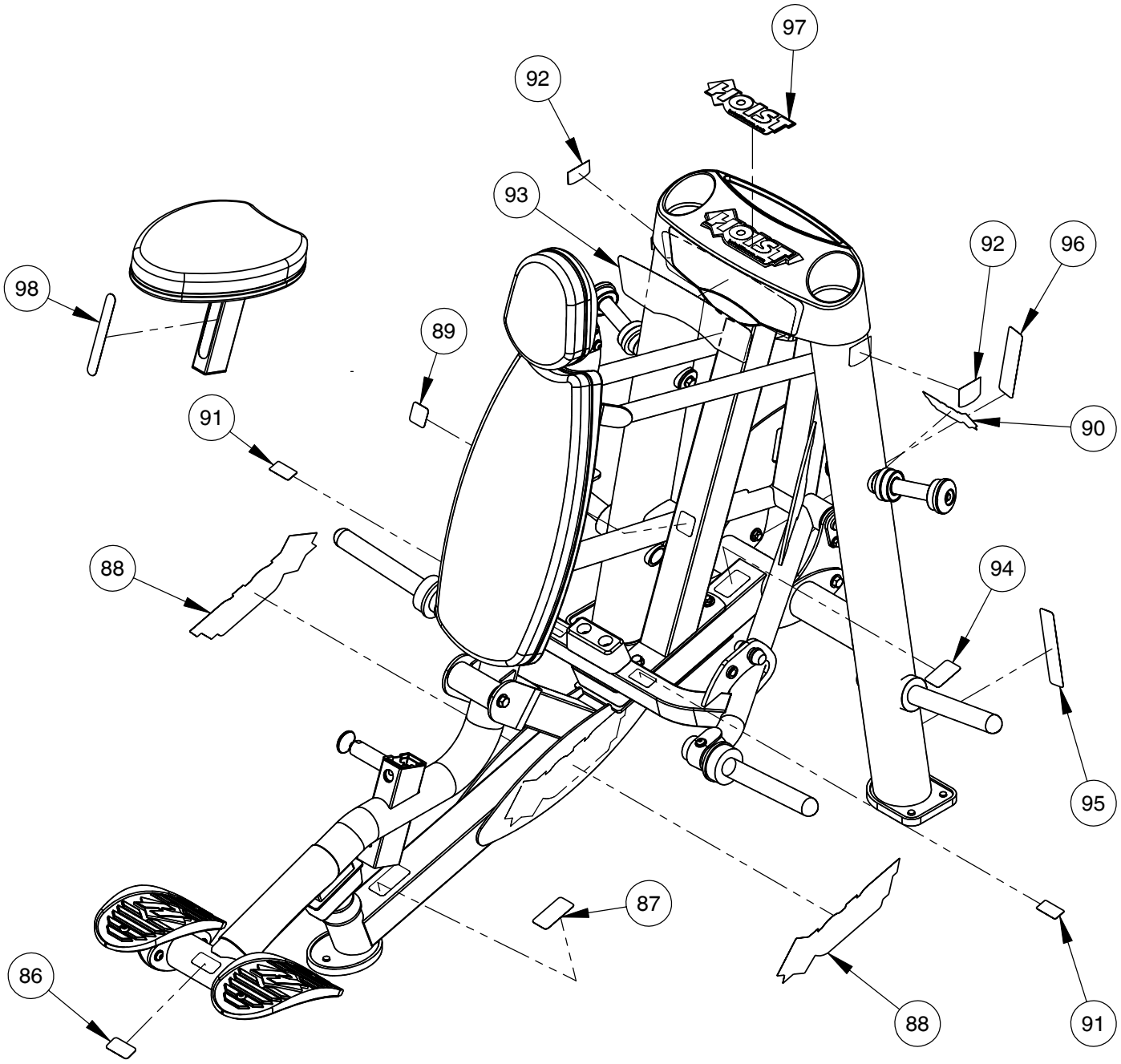

DECAL REFERENCE

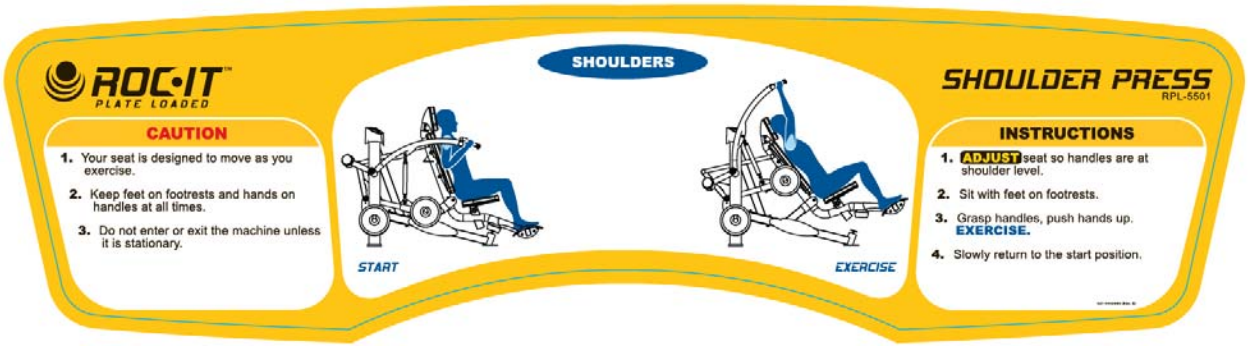

021-0003694

021-0003405

021-0003093

021-0003341

021-0003320

SERIAL # DECAL

021-0003230

021-0004032

021-0003135

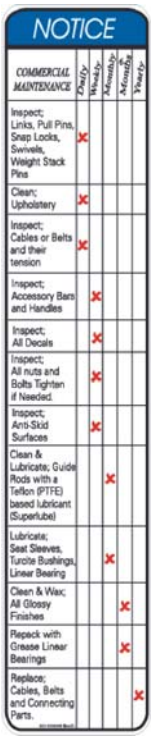

COMMERCIAL MAINTENANCE	Daily	Weekly	Monthly	Yearly
Inspect; Links, Pull Pins, Snap Locks, Swivels, Weight Stack Pins	X			
Clean; Upholstery	X			
Inspect; Cables or Belts and their tension	X			
Inspect; Accessory Bars and Handles		X		
Inspect; All Decals		X		
Inspect; All nuts and Bolts Tighten if Needed.		X		
Inspect; Anti-Skid Surfaces		X		
Clean & Lubricate; Guide Rods with a Teflon (PTFE) based lubricant (Superlube)			X	
Lubricate; Seat Sleeves, Turcite Bushings, Linear Bearing			X	
Clean & Wax; All Glossy Finishes				X
Repack with Grease Linear Bearings				X
Replace; Cables, Belts and Connecting Parts.					X

021-0003008

021-0003334

021-0003113

PART LIST

NOTE: SOME OF THESE PARTS MAY COME PRE-INSTALLED

ITEM NO.	PART NUMBER	DESCRIPTION	QTY.
1	022-01PD2054-A	SEAT PAD ASSEMBLY	1
2	022-01PD2055	UPHOLSTERED HEAD PAD	1
3	022-01PD2058	UPHOLSTERED BACK PAD	1
4	026-01M2358	30 LB. COUNTERWEIGHT, RUBBER COATED	2
5	026-01PL2236	TOP CAP W/INSERTS	1
6	026-01X2387	SEAT PAD ASSEMBLY	1
7	026-01X2402	FOOT PLATE ASSEMBLY	2
8	026-01X2849	RACHET PULL-PIN ASSEMBLY	1
9	026-01X2975	FOOT PLATE MOUNT ASSEMBLY	2
10	026-01X3235	CENTER UPRIGHT	1
11	026-01X3276	RIGHT PRESS ARM	1
12	026-01X3282	PRESS ARM LINK	2
13	026-01X3287	SHAFT, LIFT-ARM ASSEMBLY	1
14	026-01X3288	BASE FRAME ASSEMBLY	1
15	026-01X3292	LIMITING STOP ASSEMBLY	1
16	026-01X3294	REAR UPRIGHT LEFT ASSEMBLY	1
17	026-01X3296	USER SUPPORT FRAME ASSEMBLY	1
18	026-01X3305	WEIGHT HORN ASSEMBLY	2
19	026-01X3308	LINK ASSEMBLY	2
20	026-01X3314	LIFT ARM ASSEMBLY	1
21	026-01X3334	LEFT PRESS ARM	1
22	026-01X3377	REAR UPRIGHT RIGHT ASSEMBLY	1
23	026-01X3403	PRESS-ARM MOUNT ASSEMBLY	2
24	026-01X3416	TIE-ROD END LEFT HANDED	2
25	026-01X3420	TIE-ROD END RIGHT HANDED	2
26	011-0411001	SET SCREW: 1/4"-28 X .25" LG. (SS)	4
27	012-0105009	12 mm JAMNUT RH	2
28	012-0105010	12 mm JAMNUT LH	2
29	012-0202001	1/2"-13 FLANGED NUT (WZ)	1
30	014-0005001	BEARING: (SMALL) Ø1.37" O.D. X Ø.75" I.D.	4
31	014-0009007	BEARING: FLANGED Ø2.00" O.D. X Ø1.00" I.D.	4
32	014-0012013	BEARING: BALL BEARING Ø2.44" O.D. X Ø1.18" I.D.	4
33	014-0019005-2	SPLIT COLLAR: 1.00" I.D. X 20mmT NON-THREADED	1
34	016-0001003	END CAP 1.50" X 2.50" (BLACK)	1
35	026-01F0251	BRACKET PLATE: 2 HOLES 7.00" X 2.75"	1

PART LIST CONTINUED

NOTE: SOME OF THESE PARTS MAY COME PRE-INSTALLED

ITEM NO.	PART NUMBER	DESCRIPTION	QTY.
36	026-01F0316	8" FLNG.	1
37	026-01M0660	SHAFT Ø1.00" O.D. X Ø .52" I.D. X 4.69" LG.	1
38	026-01M0927	SHAFT Ø.75" O.D. X Ø.52" I.D. X 3.82" LG.	2
39	026-01M0932	END CAP: ALUMINIUM Ø1.25" ID	2
40	026-01M0933	ALUMINUM RING: Ø1.25" ID	2
41	026-01M1185	WEIGHT HORN SHAFT 15.00"LG.	2
42	026-01M2356	END CAP: DOMED Ø 2.75" O.D.	2
43	026-01P2920	HEAD BRACKET MOUNT	1
44	026-01P2925	PAD MOUNT BRACKET	2
45	022-01PD2055-5	PLASTIC HEAD PAD BACKING	1
46	022-01PD2058-5	PLASTIC BACK PAD BACKING	1
47	026-01PL0125	E-Z GLIDE PLASTIC SLEEVE	2
48	026-01PL0235-33	∅1.188" X 14.17" OPEN END GRIP	2
49	026-01PL0264	WEIGHT HORN RUBBER DONUT	2
50	026-01PL2122	OVAL-SHAPED RUBBER FOOT	1
51	026-01PL2131	D-SHAPED RUBBER FOOT	2
52	026-01PL2197	PLASTIC SCUFF GUARD 11.05" LG.	1
53	026-01PL2200	PINETREE PLUG	1
54	026-01PL2246	DUAL HOLE BUMPER 2.05" THICK	3
55	026-01PL2313	WEIGHT HORN RUBBER DONUT W/ 3.75 COPE	2
56	013-0002003	1/4" X 16mm SAE FLAT WASHER (WZ)	2
57	013-0302008	5/16" SAE FLAT WASHER (WZ)	10
58	013-0402007	3/8" X 22mm FLAT WASHER (WZ)	32
59	013-0102003	1/2" X 27mm SAE FLAT WASHER (WZ)	36
60	013-0102023	1/4" INTERNAL LOCK WASHER	2
61	013-0102022	3/8" INTERNAL LOCK WASHER	14
62	013-0408001	3/8" INTERNAL LOCK WASHER (SS)	2
63	013-0302014	1/2" INTERNAL LOCK WASHER	6
64	011-0007097	1/4"-20UNC X .75" SHCS (BZ)	2
65	011-0101122	1/4"-20UNC X 2.50" BHCS (WZ) w/ NYLON PATCH	2
66	011-0101030	5/16"-18UNC X 1.00" BHCS (WZ)	1
67	011-0107029	5/16"-18UNC X 1.00" HHB (WZ)	8
68	011-0107011	5/16"-18UNC X 1.25" HHB (WZ)	2
69	011-0311013	3/8-16UNC X .75" SQUARE HEAD (WZ)	1
70	011-0407022	3/8"-16UNC X 1.00" HHB (WZ)	1

PART LIST CONTINUED

NOTE: SOME OF THESE PARTS MAY COME PRE-INSTALLED

ITEM NO.	PART NUMBER	DESCRIPTION	QTY.
71	011-0101026	3/8"-16UNC X 1.00" BHCS (WZ)	16
72	011-0401002	3/8"-16UNC X 1.25" BHCS (SS)	2
73	011-0101034	3/8"-16UNC X 1.25" BHCS (WZ)	2
74	011-0407042	1/2"-13UNC X 1.00" HHB (WZ)	4
75	011-0101020	1/2"-13UNC X 1.00" BHCS (WZ)	4
76	011-0101016	3/8"-16UNC X 2.75" BHCS (WZ)	4
77	011-0407016	1/2"-13UNC X 3.00" HHB (WZ)	2
78	011-0407047	1/2"-13UNC X 4.00" HHB (WZ)	2
79	011-0107038	1/2"-13UNC X 4.25" HHB (WZ)	2
80	011-0407055	1/2"-13UNC X 4.75" HHB (WZ)	2
81	011-0107014	1/2"-13UNC X 5.00" HHB (WZ)	2
82	011-0107036	1/2"-13UNC X 5.75" HHB (WZ)	1
83	012-0104008	3/8"-16 UNC THIN NYLOCK NUT (WZ)	9
84	012-0304011	1/2"-13 UNC THIN NYLOCK NUT (WZ)	19
85	012-0104013	12mm THICK NYLOCK NUT (WZ)	4
86	021-0003093	DECAL MOVING PARTS 1.20" X 2.38" (HOR)	1
87	021-0003113	DECAL PINCH POINT 1.63" X 3.25" (VERTICAL)	1
88	021-0003334	DECAL HOIST 3.90" X 14.25"	2
89	021-0003320	DECAL 800 LB. WEIGHT RATING (1.63" X 1.63")	1
90	021-0003230	DECAL HOIST 1.63" X 5.93"	1
91	021-0003341	DECAL PINCH POINT 1.07" X 2.13" (HORIZONTAL)	2
92	021-0003405	DECAL ROX	2
93	021-0003694	RPL-5501 SHOULDER PRESS PLACARD	1
94	SERIAL # DECAL	DECAL HOIST SERIAL # 1.63" X 2.63"	1
95	021-0003008	DECAL COMMERCIAL MAINTENANCE 1.50" X 6.69"	1
96	021-0003135	DECAL WARNING 1.50" X 6.69"	1
97	021-0018022	DECAL HOISTFITNESS.COM LOGO	1
98	021-0004032	DECAL ADJUST 1-7 VERTICAL TXT.	1
99	026-01M2372	STEPPED WASHER	2
100	011-0407038	1/2"-13UNC X 1.25" HHB (WZ)	2
101	013-0001003	.50" CAP WASHER	8
102	016-0003001	.50" CAP WASHER CAP	8
103	011-0107082	M12 X 40mm HHB (WZ)	2
104	012-0104014	M12 LOCKING NUT (WZ)	2

ABBREVIATIONS

BZ = Black Zinc

WZ = White Zinc

HHB = Hex Head Bolt

FHCS = Flat Head Cap Screw

BHCS = Button Head Cap Screw

SHCS = Socket Head Cap Screw

SHSS = Socket Head Shoulder Screw

BOLT SIZING CHART

5/16" HHB

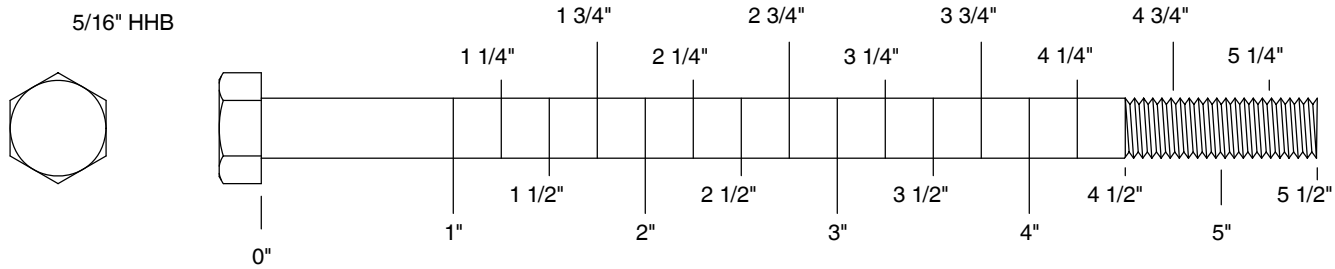

3/8" HHB

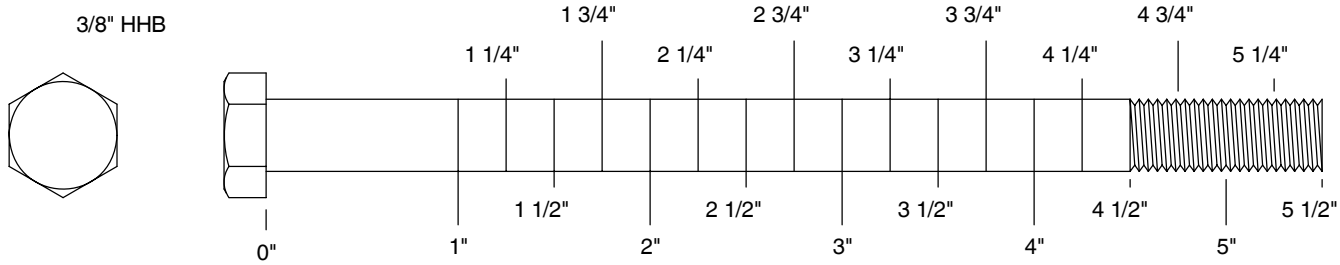

1/2" HHB

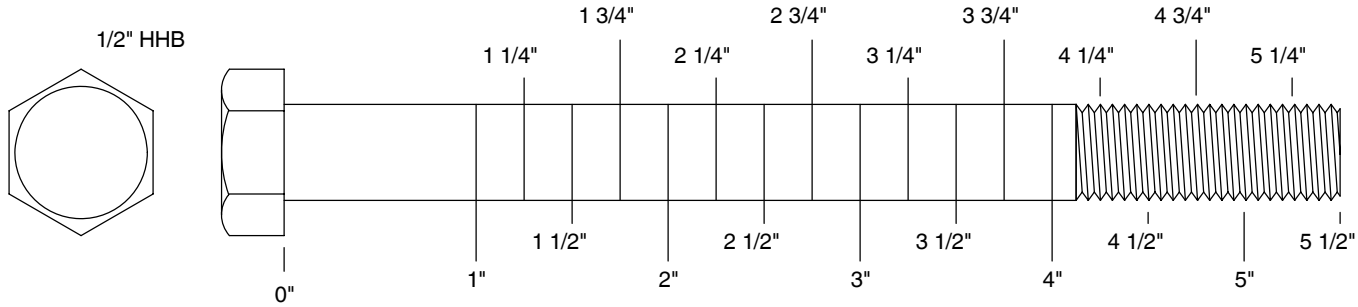

1/2" SHSS

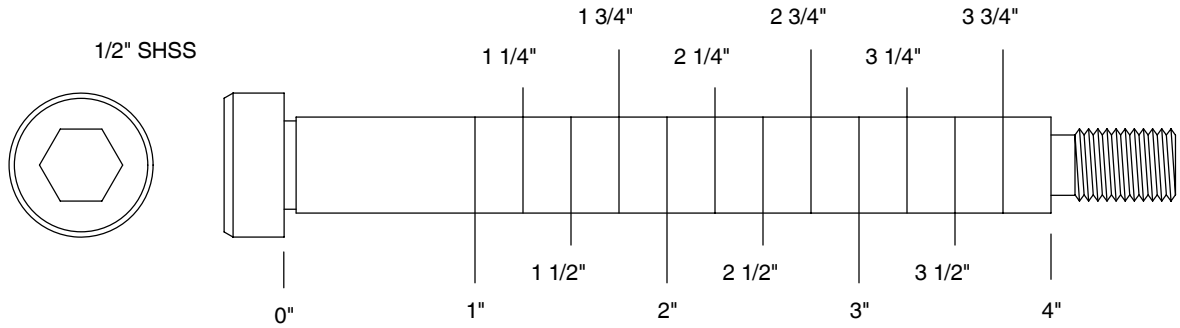

BOLT SIZING CHART
(CONTINUED)

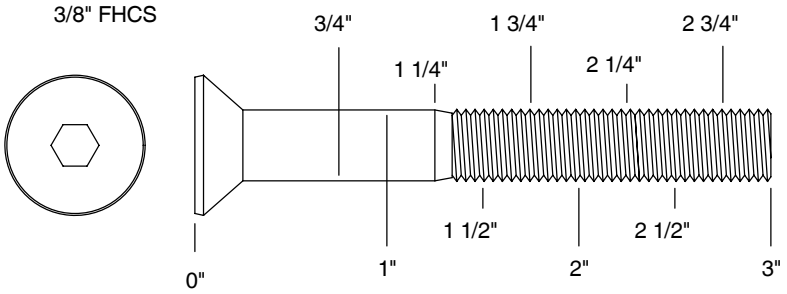

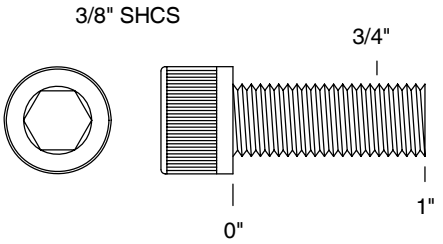

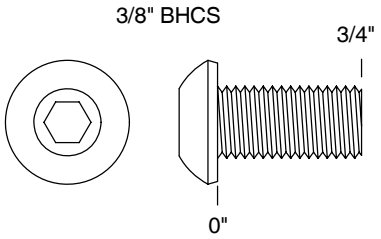

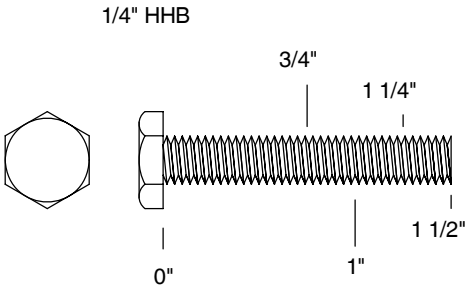

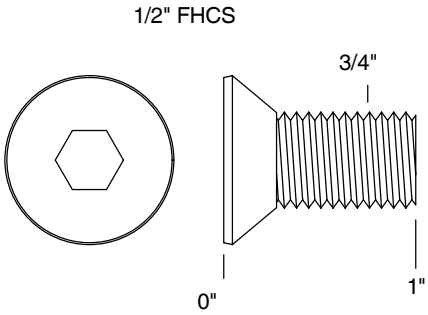

WASHER SIZING CHART

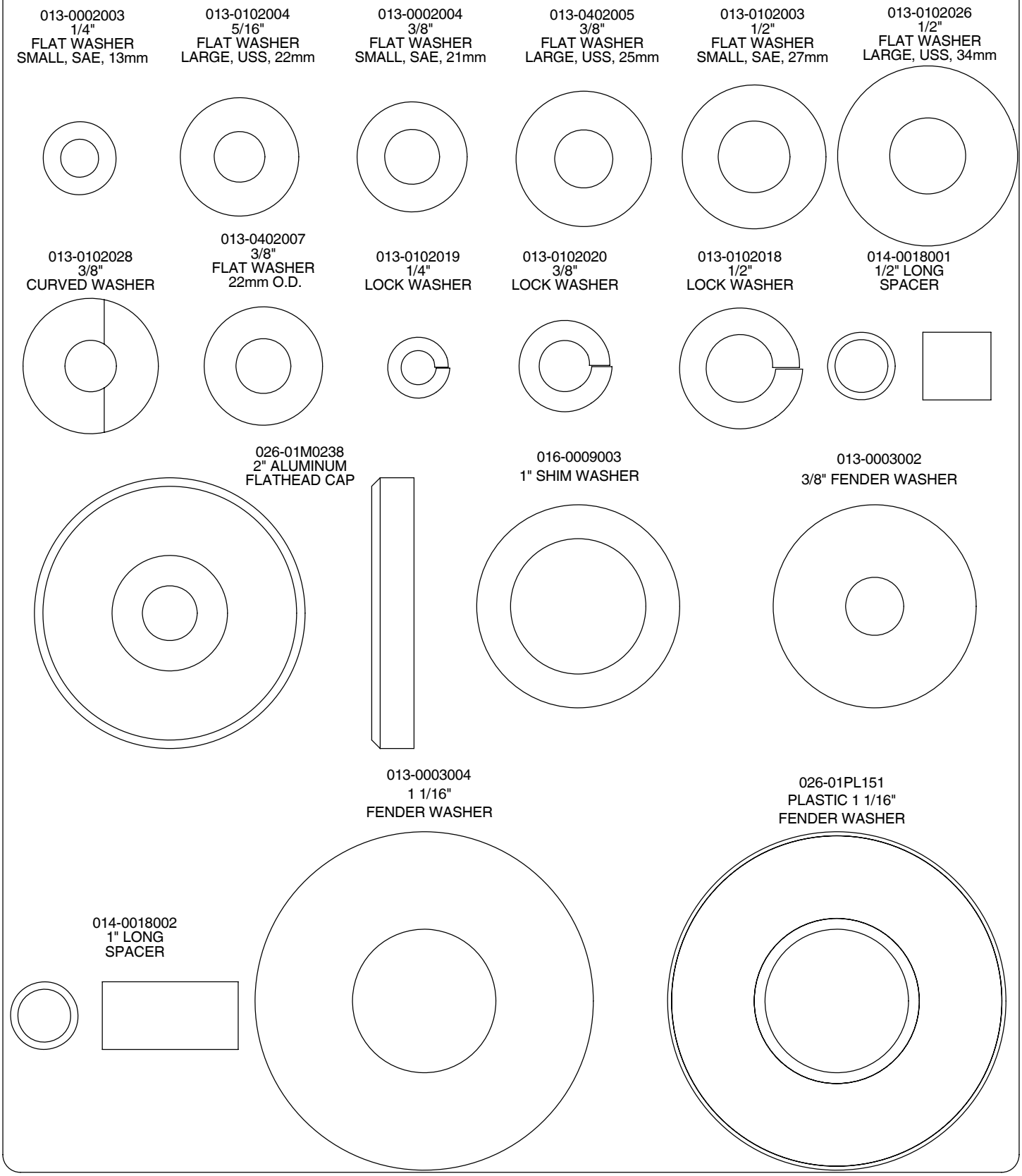

WASHER SIZING CHART
(CONTINUED)

026-01M0211
1/4" LONG
FLANGED SPACER

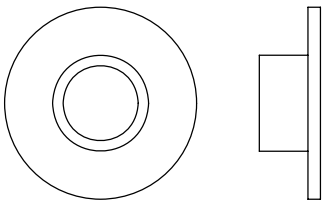

026-01M0198
1/2" LONG
FLANGED SPACER

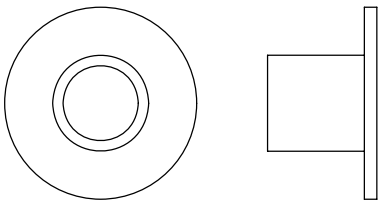

026-01M0760
1/2" LONG HEAVY
FLANGED SPACER

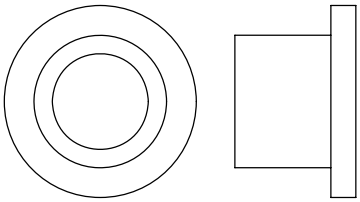

026-01M211T
1/4" LONG HEAVY
FLANGED SPACER

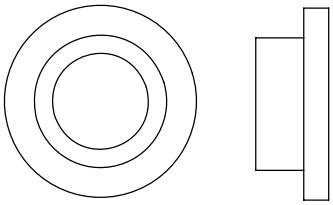

026-01M0532
11/16" LONG HEAVY
FLANGED SPACER

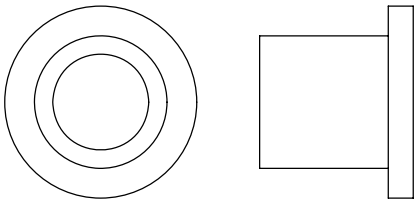

026-01M0551
1" LONG HEAVY
FLANGED SPACER

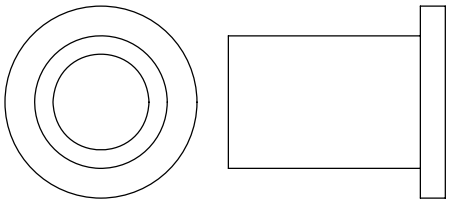

026-01M0788
.81" LONG HEAVY
FLANGED SPACER

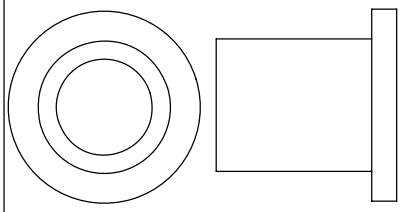

026-01M0780
.65" LONG HEAVY
FLANGED SPACER

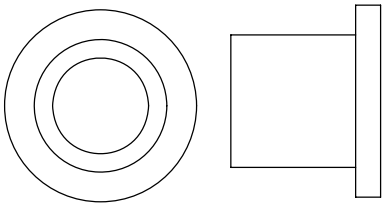

026-01M0761
1 11/16" LONG HEAVY
FLANGED SPACER

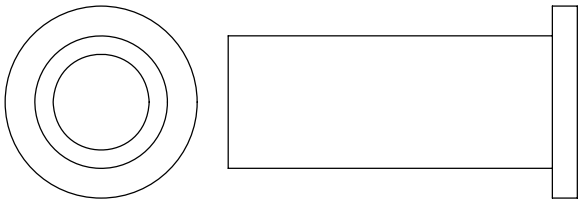

026-01M0789
.44" LONG HEAVY
FLANGED SPACER

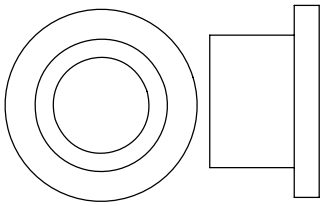

026-01M0762
1 1/2" LONG HEAVY
FLANGED SPACER

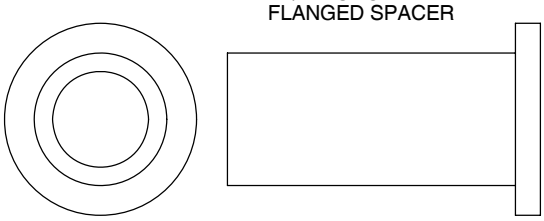

026-01M0768
1 1/4" LONG HEAVY
FLANGED SPACER

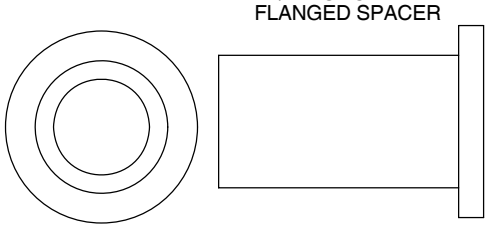

026-01M0600
.625" LONG
FLANGED SPACER

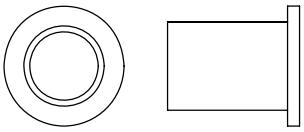

026-01M0240
1 3/8" ALUMINUM
FLATHEAD CAP

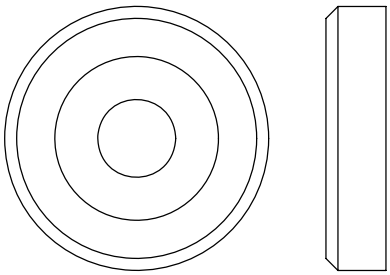

026-01M0239
1 5/8" ALUMINUM
FLATHEAD CAP

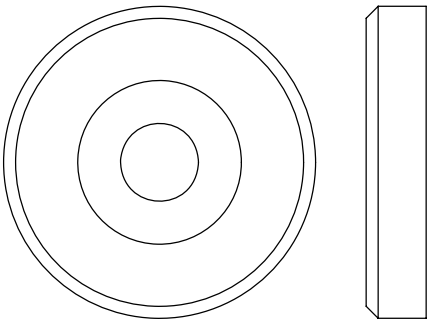

MAINTENANCE SCHEDULE

ROUTINE	*COMMERCIAL MAINTENANCE*	*HOME MAINTENANCE*	*LATEST DATE ENTRY*								
Inspect; Links, Pull Pins, Snap Locks, Swivels, Weight Stack Pins	DAILY	WEEKLY									
Clean; Upholstery	DAILY	WEEKLY									
Inspect; Cables or Belts and their tension	DAILY	WEEKLY									
Inspect; Accessory Bars, and Handles	WEEKLY	3 MONTHS									
Inspect; All Decals	WEEKLY	3 MONTHS									
Inspect; All Nuts and Bolts, Tighten if needed	WEEKLY	3 MONTHS									
Inspect; Anti-Skid Surface	WEEKLY	3 MONTHS									
Clean & Lubricate; Guide Rods with a Teflon (PTFE) based lubricant (Superlube)	MONTHLY	3 MONTHS									
Lubricate; Seat Sleeves, Turcite Bushings, Linear Bearing	MONTHLY	3 MONTHS									
Clean and Wax; All Glossy Finishes	6 MONTHS	YEARLY									
Repack with Grease; Linear Bearings	6 MONTHS	YEARLY									
Replace; Cables, Belts and Connecting Parts	YEARLY	3 YEARS									

Your equipment comes with a commercial maintenance decal.
For personal, in home use, please follow the home maintenance schedule listed above.

HOIST FITNESS SYSTEMS
GENERAL MAINTENANCE INFORMATION

Links, Pull-Pins, Snap Hooks, Swivels, Weight Stack Pins:

*Check all pieces for signs of visible wear or damage.

*Check springs in snap hooks and pull-pins for proper tension and alignment.

*If the spring sticks or has lost its rigidity, replace it immediately.

Upholstery:

*To ensure prolonged upholstery life and proper hygiene, all upholstered pads should be wiped down with a damp cloth after every workout.

*Periodically take the time to use a mild soap or an approved vinyl upholstery cleaner to deter the onset of cracking or drying. Avoid using any abrasive cleaners or cleaners not intended for use on vinyl.

*Replace ripped or warn upholstery immediately.

*Keep sharp or pointed objects clear of all upholstery.

Decals:

*Inspect and familiarize yourself with any safety warnings or other user information posted on each decal.

Nuts and Bolts:

*Inspect all nuts and bolts for any loosening and tighten if needed.

*Go through a re-tightening sequence periodically to ensure that all hardware is tensioned proper.

Anti-Skid Surfaces:

*These surfaces are designed to supply secure footing and need to be replaced if they appear worn or become slippery.

Belts and Cables:

*Hoist uses only high quality belt, and mil-spec cables.

*Visually inspect the belts and cables for fraying, cracking, peeling or discoloration.

*While the machine is not in use, carefully run your fingers along the belt or cable to feel for thinning or bulging areas.

*Replace belts and cables immediately at the first signs of damage or wear. Do not use equipment until belts or cables have been replaced.

Belt and Cable Tension:

*Referring to the Owners Manual, when belts or cables are used check all bolts attachments to be sure they are properly attached.

*Check slack in cables and re-adjust cable tension if needed.

Seat Sleeves, Guide Rods:

*Wipe down adjusting tubes with a dust free rag before applying lubricant.

*Lubricate seat sleeves and Guide Rods with a Silicon or Teflon based lubricant spray.

Linear Bearings:

*Referring to the Owners Manual carefully disassemble the bearing from its housing and place a finger full of light grease (lithium, super lube, etc.) into the inside of the bearing. Using your finger, press the grease into the ball-bearings and their tracks. repeat until the ball-bearing tracks are full of grease. Insert the shaft back into the bearing and wipe off excess grease.

PLEASE KEEP THIS FOR YOUR RECORDS

WEIGHT TRAINING TIPS

Use this manual to guide you through the basic exercises you can perform on your RPL-5501 HOIST® Fitness System. To gain maximum results and avoid possible injury, consult a fitness professional to develop your complete exercise program.

Always consult your physician before starting any exercise program.

To be successful in your exercise program, it is important to develop an understanding of the basic principles of strength training. Now that you have your RPL-5501 HOIST® Fitness System, it is only natural that you want to get started immediately. First, determine a set of realistic goals and objectives for yourself. By deciding on an exercise plan that is right for you prior to starting, you will contribute significantly to your success.

Warm up properly before engaging in weight resistance training. Stretching, yoga, jogging, calisthenics or other cardiovascular exercise can help prepare your body for the heavier workload of lifting weights.

Learn how to perform the exercise correctly before using heavy weight. Correct form is important to avoid injury and to ensure that you work the proper muscle groups.

Know your limitations. If you are new to weight training or are embarking on an exercise regimen after a long layoff, start slowly and build foundational strength over a longer period of time.

Pay attention to your breathing. Exhale when you exert is a general rule of thumb. Never hold your breath.

Enjoy your RPL-5501 HOIST® Fitness System!

WEIGHT TRAINING EXERCISE LOG

S = Sets R = Repetition per set W = Weight used

Date																																				
Exercise	S	R	W	S	R	W	S	R	W	S	R	W	S	R	W	S	R	W	S	R	W	S	R	W	S	R	W	S	R	W	S	R	W	S	R	W
Totals																																				

HOIST FITNESS SYSTEMS
LIMITED LIFETIME WARRANTY

Hoist Fitness Systems warrants this product to the **original purchaser** to be free from defects in workmanship and/or materials under normal use or service. If at any time a component part is defective, Hoist Fitness Systems shall repair or replace it (at Hoist Fitness Systems option) within a reasonable period of time. This warranty does not cover costs of removal. transportation or reinstallation. This warranty shall not apply if the defect was caused by misuse, neglect or normal wear and tear.

WARRANTY CLAIMS. All claims require: Model number, Serial number, Date of installation, and any information supporting the existence of the alleged defect.

To complete Warranty Registration visit:
www.HOISTFITNESS.com
and click on the Warranty Registration link

Starting from the original date of purchase, normal wear and tear shall be considered as the following:

COMMERCIAL USE: All malfunctions of upholstery, grips, paint, and chrome that occur after one year; all malfunctions of electronic components, belts, or cables after one year; all malfunctions of pulleys, bearings, or bushings that occur after five years. The frame and all welded components are warranted for the life of the product.

HOME USE: All malfunctions of grips, paint, and chrome that occur after ten years; all malfunctions of electronic components, belts, cables, or upholstery that occur after ten years; all malfunctions of pulleys, bearings, or bushings that occur after ten years. The frame and all welded components are warranted for the life of the product.

PLEASE NOTE THAT NOT ALL HOIST PRODUCTS ARE MADE FOR COMMERCIAL USE.
Refer to the instructions page of your owners manual or consult with you fitness product dealer to establish if a product is made for commercial use or not. Using a non-commercial product in a commercial setting can result in serious injury or death!

Hoist Fitness Systems sole responsibility shall be to repair or replace the component within the terms stated above. Hoist Fitness Systems shall not be liable for any loss or damage of any kind including any incidental or consequential damages resulting, directly or indirectly from any warranty expressed or implied or any other failure of this product.

WHAT IS NOT COVERED BY THIS WARRANTY

Hoist's sole obligation under this warranty is limited to either repair or replacement of parts, subject to the additions below. This warranty neither assumes nor authorizes any person to assume obligations other than expressly covered by this warranty.
NO CONSEQUENTIAL DAMAGES. Hoist is not responsible for economic loss; profit loss; or special, indirect, or consequential damages.

WARRANTY IS NOT TRANSFERABLE. This warranty is not assignable and applies only in favor of the original purchaser/user to whom delivered. Any such assignment or transfer shall void the warranties herein made and shall void all warranties, expressed, implied or statutory, except the one (1) and five (5) year warranties described above. These warranties are exclusive and in lieu of all other warranties, including implied warranty and merchantability or fitness for a particular purpose. There are no warranties which extend beyond the description on the face hereof.

TRANSPORTATION COSTS. Hoist will accept parts covered under this warranty freight collect, provided that shipment has received prior approval. Hoist is not responsible for any other transportation costs, but will ship freight collect parts either repaired or replaced under these warranties.

Hoist Fitness Systems
9990 Empire St. #130
San Diego, CA. 92126
(800)548-5438
PLEASE KEEP THIS FOR YOUR RECORDS